UpRight

LX50

WORK PLATFORMS

Service & Parts Manual

SERVICE & PARTS MANUAL

LX50

Gasoline, Dual Fuel, and Diesel Models

Serial Numbers 3300 - current

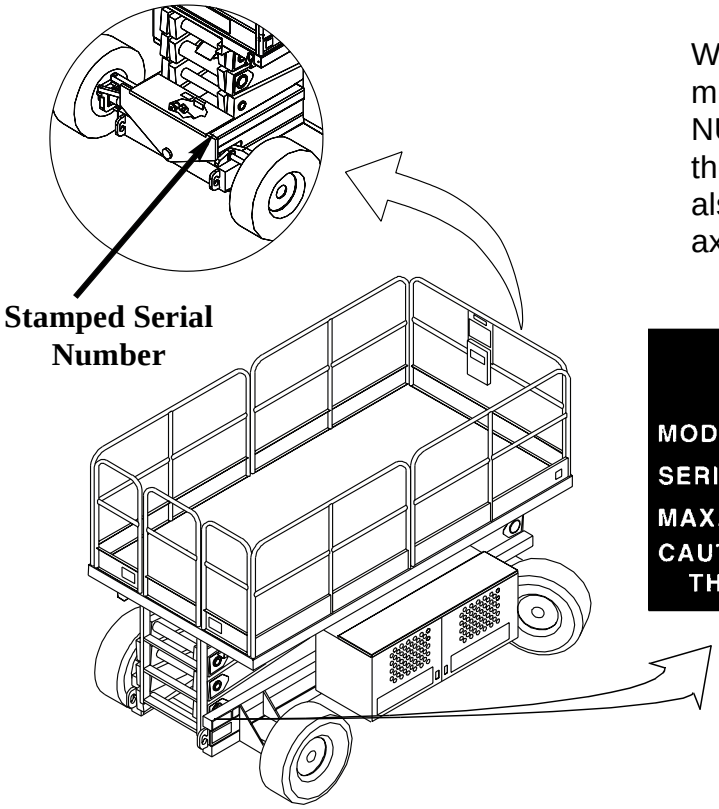

When contacting UpRight for service or parts information, be sure to include the MODEL and SERIAL NUMBERS from the equipment nameplate. Should the nameplate be missing, the SERIAL NUMBER is also stamped on top of the chassis above the front axle pivot.

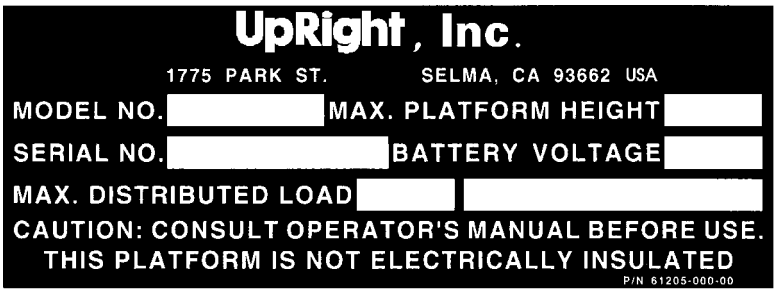

UpRight

Call Toll Free in U.S.A.

1-800-926-LIFT

Upright, Inc.
1775 Park Street
Selma, California 93662
TEL: 559/891-5200
FAX: 559/891-9012
PARTS: 1-888-UR-PARTS
PARTSFAX: 559/896-9244

UpRight Ireland, Ltd.
Pottery Road
Dun Laoire,
Ireland
TEL: +353-1-202-4100
FAX: +353-1-202-4105

P/N 067904-007
3/00 K

FORWARD

HOW TO USE THIS MANUAL

This manual is divided into 6 sections. The section number printed at the top corner of each page can be used as a quick reference guide.

SPECIAL INFORMATION

DANGER

Indicates the hazard or unsafe practice will result in severe injury or death.

WARNING

Indicates the hazard or unsafe practice could result in severe injury or death.

CAUTION

Indicates the hazard or unsafe practice could result in minor injury or property damage

NOTES: Give helpful information.

WORKSHOP PROCEDURES

CAUTION: Detailed descriptions of standard workshop procedures, safety principles and service operations are not included. Please note that this manual does contain warnings and cautions against some specific service methods which could cause personal injury, or could damage a machine or make it unsafe. Please understand that these warnings cannot cover all conceivable ways in which service, whether or not recommended by UpRight, Inc., might be done, or of the possible hazardous consequences of each conceivable way, nor could UpRight Inc. investigate all such ways. Anyone using service procedures or tools, whether or not recommended by UpRight Inc., must satisfy themselves thoroughly that neither personal safety nor machine safety will be jeopardized.

FORWARD

Notes:

TABLE OF CONTENTS

TABLE OF CONTENTS

LIST OF FIGURES

SECTION 1
Introduction & Specifications

SECTION 2
Machine Preparation & Operation

SECTION 3
Maintenance

LIST OF FIGURES

SECTION 5
Schematics

LIST OF TABLES

SECTION 1
Introduction & Specifications

SECTION 2
Machine Preparation & Operation

SECTION 3
Maintenance

SECTION 4
Troubleshooting

SECTION 5
Schematics

List of Tables

Notes:

Section 1

INTRODUCTION & SPECIFICATIONS

1.1 INTRODUCTION

Purpose

The purpose of this service and parts manual is to provide instructions and illustrations for the operation and maintenance of the LX50 Work Platform manufactured by UpRight, Inc. of Selma, California.

Scope

The manual includes procedures for proper operation, maintenance, adjustment, and repair of this product as well as recommended maintenance schedules and troubleshooting.

1.2 GENERAL DESCRIPTION

The LX50 Work Platform consists of the platform, controller, elevating assembly, power module, control module, and chassis.

Platform

The platform has a reinforced steel floor, 43.5 inch (1.11 m) high guardrails with midrail, 6 inch (152 mm) toeboards and an entrance gate at the rear of the platform. The guardrails can be folded down for access through doors or for shipment.

⚠ WARNING ⚠

***DO NOT** use the maintenance platform without guardrails properly assembled and in place.*

Controller

The controller contains the controls to operate the machine. It should be hung on the front, left, or right guardrail, but may be hand held if necessary. To operate the machine, the interlock lever must be depressed to operate any function. A complete explanation of control functions can be found in Section 2.

Elevating Assembly

The platform is raised and lowered by the elevating assembly; a five section scissor assembly powered by two single-stage lift cylinders. The hydraulic pump, driven by the engine, powers the cylinder. Solenoid operated valves control raising and lowering.

Power Module

The power module contains the engine, hydraulic pump, hydraulic reservoir, and starter solenoid.

Control Module

The control module contains the L.P. bottle and/or fuel tank, hydraulic valve manifold, horn/alarms, volt/hour meter, electrical terminal strips, battery, and chassis control panel. A complete explanation of the chassis control functions is found in Section 2.

Chassis

The chassis is a structural frame that supports all the components of the LX50 Work Platform.

Introduction & Specifications

Purpose of Equipment

The objective of the LX50 Work Platform is to provide a quickly deployable, self propelled, variable height work platform to elevate personnel and materials to overhead work areas and be driven over rough terrain (4WD model only).

Special Limitations

Travel with the platform raised is limited to a creep speed range.

Elevating of the Work Platform is limited to firm, level surfaces only. Any degree of slope greater than 3° will lockout the elevating circuits and sound a warning alarm.

Four wheel models: driving while elevated is limited to flat surfaces only. Machine must be level and Front and Rear Axles must be parallel

⚠ DANGER ⚠

The elevating function shall ONLY be used when the work platform is level and on a firm surface. The work platform is NOT intended to be driven over uneven, rough or soft terrain when elevated.

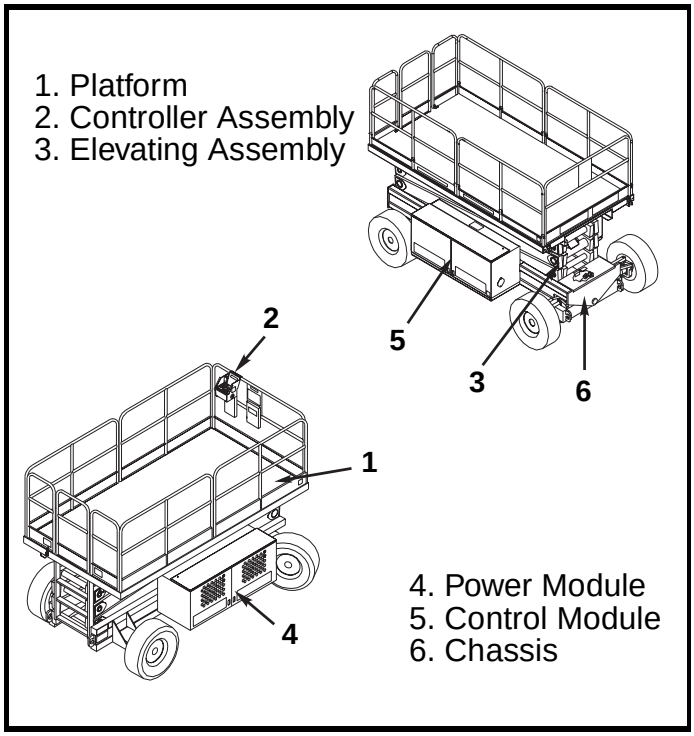

Figure 1-1: LX50 Work Platform

1.3 SPECIFICATIONS

Table 1-1: Specifications

Specifications are subject to change without notice
Meets or exceeds all applicable requirements of OSHA and ANSI A92.6-1999

ITEM	LX50
Platform Size (Inside toeboards)	
Standard	143 3/8 in x 70 in. [3,64 m x 1,78 m]
Slide Out Deck Extended	179 3/8 in. x 68 in. [4,57 m x 1,73]
Max. Platform Capacity	
Standard	1,000 lbs. [454 kg]
w/ Extension	1,000 lbs. [454 kg], on Extension 500 lbs. [227 kg]
w/ Dual Deck	750 lbs [340 kg]. on Extension 500 lbs. [227 kg]
Max. No. of occupants	
Standard	4 people
on Extension	2 people
Height	
Working Height	56 ft. [17,09 m]
Max. Platform Height	49 ft. 6 in. [15,09 m]
Min. Platform Height	76 in. [1,93 m]
Drivable Height	49 ft. 6 in. (15,09 m)
Dimensions	
Weight, Standard	2WD: 12,220 lbs. [5,534 kg] 4WD: 12,480 lbs. [5,656 kg]
Weight, w/extension	2WD: 12,690 lbs. [5,756 kg] 4WD: 12,960 lbs. [5,879 kg]
Overall Width	90 in. [2,29 m]
Overall Height	118.25 in. [3 m]
Overall Length, Standard	160.5 in. [4,08 m]
Surface Speed	
Platform Lowered	0 to 3.1 mph [0 to 5,0 km/h]
Platform Raised	0 to 0.3 mph [0 to 0,48 km/h]
System Voltage	12 Volt DC
Hydraulic Tank Capacity	28.3 US Gallons [107.13 l]
Maximum Hydraulic System Pressure	3000 psi [206,8 bar]
Hydraulic Fluid	
Normal use, above 32° F [0° C]	ISO #46
Low Temp. Use, below 32° F [0° C]	ISO #32
Extreme Temp. Use, below 0° F [-17° C]	ISO #15
Lift System	Two Single Stage Lift Cylinders
Lift Speed	Raise, 45 sec./Lower, 65 sec.
Platform Leveling	8.5° (12 in. [.3m]) Side/Side, 6° (12 in. [.3m] Fore/Aft
Power Source	Diesel or Gasoline 20 HP Kubota, 3 Cylinder, Water Cooled
Drive Control	Proportional
Control System	Joystick Controller with Interlock Lever and Thumb Rocker Steering; Speed & Function Selector Switches and Emergency Stop Button
Horizontal Drive	2WD: 2 Wheel, Hyd. Motors 4WD: 4 Wheel, Hyd. Motors
Air Filled Tires	10-16.5 NHS 8 Ply, 50psi. [3,4 bar]
Parking Brakes	Two, Spring Applied, Hydraulic Release, Multiple Disc
Turning Radius (inside)	48 in. [1,22 m]
Maximum Gradeability	2wd: 30% [16,7°] 4wd: 24% [13,5°]
Wheel Base	115.75 in. [2,94 m]
Guardrails	43.5 in. [1.1 m] high, Fold Down with gate.
Toeboard	6 in. [152 mm] High

Notes:

Section 2

MACHINE PREPARATION & OPERATION

Warning

All personnel shall carefully read, understand and follow all safety rules, operating instructions, and the Scaffold Industry Association's ***Manual of Responsibilities (ANSI A92.6)*** before operating or performing maintenance on any Upright aerial work platform.

Safety Rules

NEVER operate the machine within ten feet of power lines.

THIS MACHINE IS NOT INSULATED.

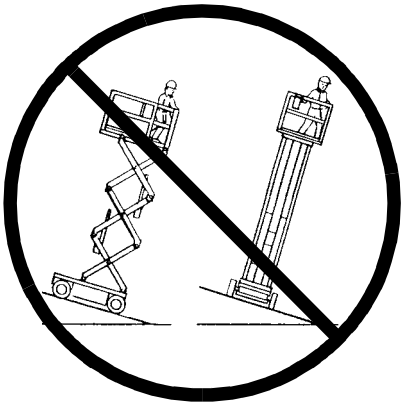

NEVER elevate or drive elevated on uneven slopes or soft ground or elevate the platform unless the platform is level.

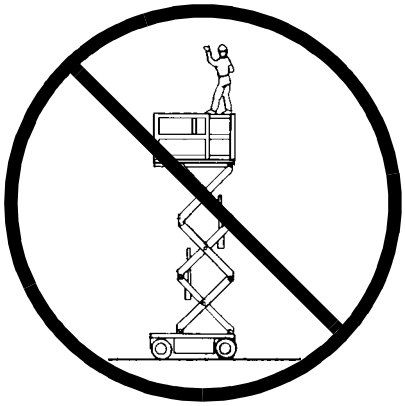

NEVER sit, stand or climb on guardrail or midrail.

NEVER operate the machine without first surveying the work area for surface hazards such as holes, drop-offs, bumps and debris.

NEVER operate the machine if all guardrails are not properly in place and secured with all fasteners properly torqued.

SECURE and lock gate after mounting platform.

KEEP all body parts clear of outriggers when extending or retracting (outrigger equipped machines only).

NEVER use ladders or scaffolding on the platform.

NEVER attach overhanging loads or increase platform size.

LOOK up, down and around for overhead obstructions and electrical conductors.

DISTRIBUTE all loads evenly on the platform. See the back cover for maximum platform load.

NEVER use damaged equipment. (Contact UpRight for instructions. See toll-free phone number on back cover.)

NEVER change operating or safety systems.

INSPECT the machine thoroughly for cracked welds, loose hardware, hydraulic leaks, damaged control cable, loose wire connections and wheel bolts.

NEVER climb down elevating assembly with the platform elevated.

NEVER perform service on machine while platform is elevated without blocking elevating assembly.

NEVER recharge battery near sparks or open flame; batteries that are being charged emit highly explosive hydrogen gas.

AFTER USE secure the work platform against unauthorized use by turning key switch off and removing key.

NEVER replace any component or part with anything other than original UpRight replacement parts without the manufacturer's consent.

California Proposition 65 Warning

Gasoline and diesel engine exhaust and some of their constituents are known to the State of California to cause cancer, birth defects, and other reproductive harm.

MACHINE PREPARATION & OPERATION

NOTE: Read and familiarize yourself with all operating instructions before attempting to operate the LX50 Work Platform.

2.1 PREPARATION FOR USE

CAUTION

STAND CLEAR when cutting the metal banding to avoid being cut if the banding snaps back.

1. Remove the metal banding from the module covers and elevating linkage.
2. Remove the banding from the control console.
3. Remove tie wraps holding guardrail gate.
4. Connect the negative (-) lead to the negative (-) battery terminal in power module (Figure 2-1).

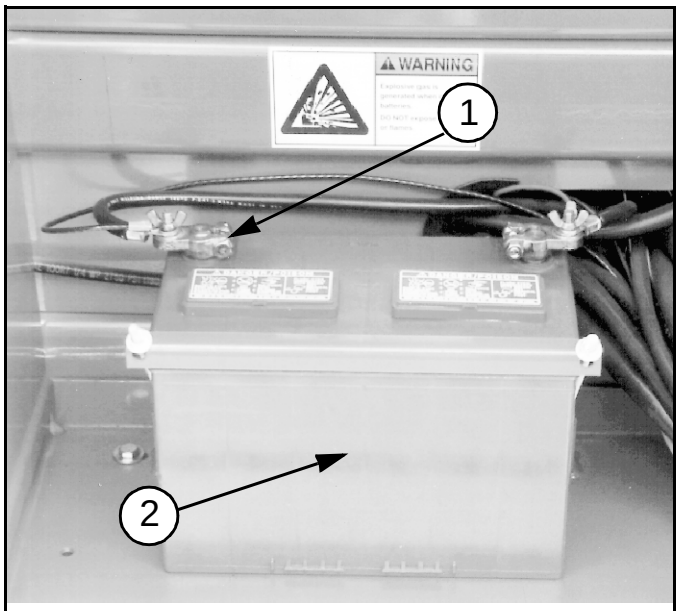

1. Negative Battery Terminal
2. Battery

Figure 2-1: Battery

2.2 TRANSPORTING WORK PLATFORM

By Crane

1. Secure straps to chassis tie down/lifting lugs only (Figure 2-2).

By Truck

1. Maneuver the work platform into transport position and chock wheels.
2. Secure the work platform to the transport vehicle with chains or straps of adequate load capacity attached to the chassis tie down/lifting lugs.

CAUTION

Overtightening of chains or straps through tie down lugs may result in damage to work platform.

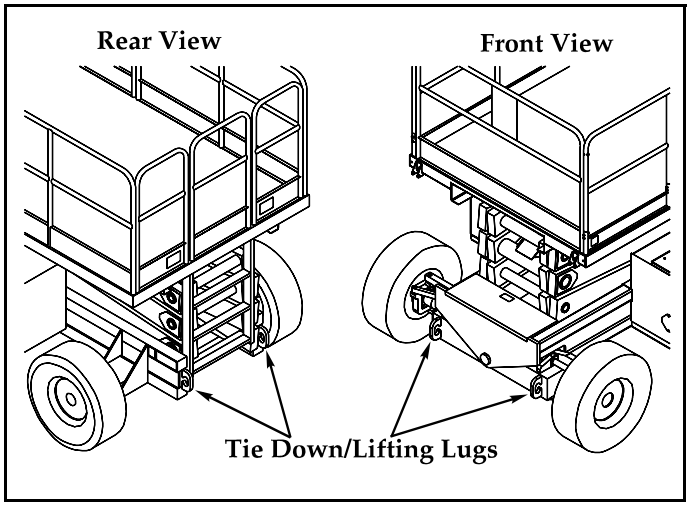

Figure 2-2: Transporting Work Platform

2.3 PREPARATION FOR SHIPMENT

1. Grease all the grease fittings. (See Section 3)
2. Fully lower the platform.
3. Disconnect the battery negative (-) lead from the battery terminal Figure 2-1.
4. Band the controller to the front guardrail.
5. Band the elevating linkage to the frame.

2.4 STORAGE

No preparation for storage is required when the work platform is in normal usage. Regular maintenance procedures should continue to be performed (see Figure 3-1 & Table 3-1).

If the work platform is to be placed in long term storage (dead storage), follow the recommended preservation procedures, below.

Preservation

1. Clean painted surfaces. If the paint is damaged, repaint.
2. Fill the hydraulic tank to operating level, fluid will be visible at the Sight Gauge. DO NOT fill the hydraulic tank while the platform is elevated.

   NOTE: DO NOT drain the hydraulic system prior to long term storage.
3. Coat exposed portions of extended cylinder rods with a preservative such as multipurpose grease and wrap with barrier material.
4. Coat all exposed unpainted metal surfaces with preservative.
5. Service the engine according to the manufacturers recommendations.

Battery

1. Disconnect the battery negative (-) cable and secure to the chassis.
2. Disconnect the remaining battery leads and secure to the chassis.
3. Remove the battery and place in alternate service

2.5 DESIGN FEATURES

The LX50 has the following features to insure safe operation:

1. The Lift Valve will not energize unless the chassis is level.
2. The Floating Front Axle locks in position upon elevating the work platform.
3. A warning alarm sounds and Drive Valves are de-energized if the work platform should become unlevel while elevated.
4. A motion alarm sounds when the work platform is lowering.
5. The platform descent rate is controlled by an orifice. The Lift Cylinder is equipped with a holding valve to prevent descent should a leak develop.
6. The drive speed is limited to “creep” speed when operating the work platform while elevated.
7. Drive will not operate while elevated unless the Floating Front Axle is positioned parallel to the Rear Axle.
8. Holding brakes are automatically engaged when the Drive Valves are de-energized from the Controller or from a loss of power.
9. The Platform and Chassis controls are each equipped with an Emergency Stop Switch.
10. Up and Down Buttons are located in the Control Module on the chassis for lifting and lowering the work platform from ground level.
11. The Down Valve can be operated manually by means of a cable linkage in the event of powered function failure.
12. Dynamic braking, and runaway protection are provided by the use of Counterbalance Valves in the drive system.
13. A Level Sensor is used to sense when the machine is unlevel, disabling lift functions, and drive when elevated.
14. Drive is disabled when Outriggers are deployed.
15. When using Outriggers, lift is disabled if Outriggers are not taking load.

2.6 CONTROLS AND INDICATORS

The controls and indicators for operation of the LX50 Work Platform are shown in Figure 2-3. The name and function of each control and indicator are listed in Table 2-1. The index numbers in Figure 2-3 correspond to the index numbers in Table 2-1. The operator shall know the location of each control and indicator and have a thorough knowledge of the function and operation of each before attempting to operate the unit.

Table 2-1: Controls and Indicators

Controller/Platform

INDEX #	NAME	FUNCTION
1	KEY SWITCH	Turn key fully clockwise to start engine, when released key goes to RUN to provide power to the Interlock Switch.
2	EMERGENCY STOP SWITCH	Push red button to cut power to all controls (off). Turn clockwise to provide power (on).
3	CONTROL LEVER	Move joystick forward or backwards to control Drive and Lift Valves proportionally or Down Valve depending on position of Drive Lift Switch.
4	STEERING SWITCH	Moving the momentary rocker switch Right or Left steers the work platform in that direction. Although the Steering Switch is self centering the steering system is not. **The wheels must be steered back to straight.**
5	DRIVE SPEED/ TORQUE SELECTOR SWITCH	Provides two speed/torque ranges, in forward or reverse. **High Speed**-low torque and **High Torque**-low speed.
6	DRIVE/LIFT SWITCH	Selecting **Drive** allows the work platform to move forward or reverse. Selecting **Lift** allows the work platform to raise or lower.
7	INTERLOCK LEVER SWITCH	Provides power to the Controller powered functions, only when depressed, preventing accidental activation of the Controller.
8	DRIVE ENABLE INDICATOR	Illuminates when drive is enabled, turns off when disabled.
9	OUTRIGGER SWITCHES	Push up to extend Outriggers, down to retract them.
10	ORBIT LEVEL	Use when leveling machine with Outriggers.
11	CHOKE BUTTON (gasoline / dual fuel)	Press to engage choke when starting engine.
	GLOW PLUG BUTTON (diesel)	Press and hold for 6 seconds to preheat glow plugs before starting.

Chassis

INDEX #	NAME	FUNCTION
12	HOURMETER (optional)	Tracks the number of hours of engine powered operation.
13	RAISE BUTTON	Press button to lift the platform and
14	LOWER BUTTON	Press button to lower the platform.
15	EMERGENCY STOP SWITCH	Push red button to cut power to all controls (off). Turn clockwise to provide power (on).
16	FUEL SELECTOR SWITCH (Dual Fuel Only)	Turning switch left or right changes the engine's fuel supply between Gasoline and Propane. Placing the switch in the center position purges the fuel lines prior to changing fuels.
17	EMERGENCY LOWERING VALVE	Pull out to lower the platform in the event of powered function failure.
18	DOWN ALARM*	Sounds an audible signal while platform is lowering during normal operation. If the Emergency Lowering Valve is used the alarm does not sound.
	TILT ALARM*	Sounds an audible signal when the platform is elevated and on a slope of 2° side to side or fore and aft.
19	BRAKE RELEASE PUMP	Releases the Parking Brake allowing the machine to be moved in the event power is lost or for winching onto a trailer. See Section 3.5.
20	START BUTTON	Press to start the engine. Release after engine starts.
21	STOP BUTTON	Press to kill the engine.
22	THROTTLE BUTTON	Press to increase engine RPM when operating functions from the lower control panel.
23	PLATFORM / CHASSIS SWITCH	Turn switch to the left to enable platform controls. Turn switch to the right to enable chassis controls.
24	CHOKE BUTTON (gasoline / dual fuel)	Press to engage choke when starting engine.
	GLOW PLUG BUTTON (diesel)	Press and hold for 6 seconds to preheat glow plugs before starting.

* Down Alarm and Tilt Alarm are the same unit with different inputs.

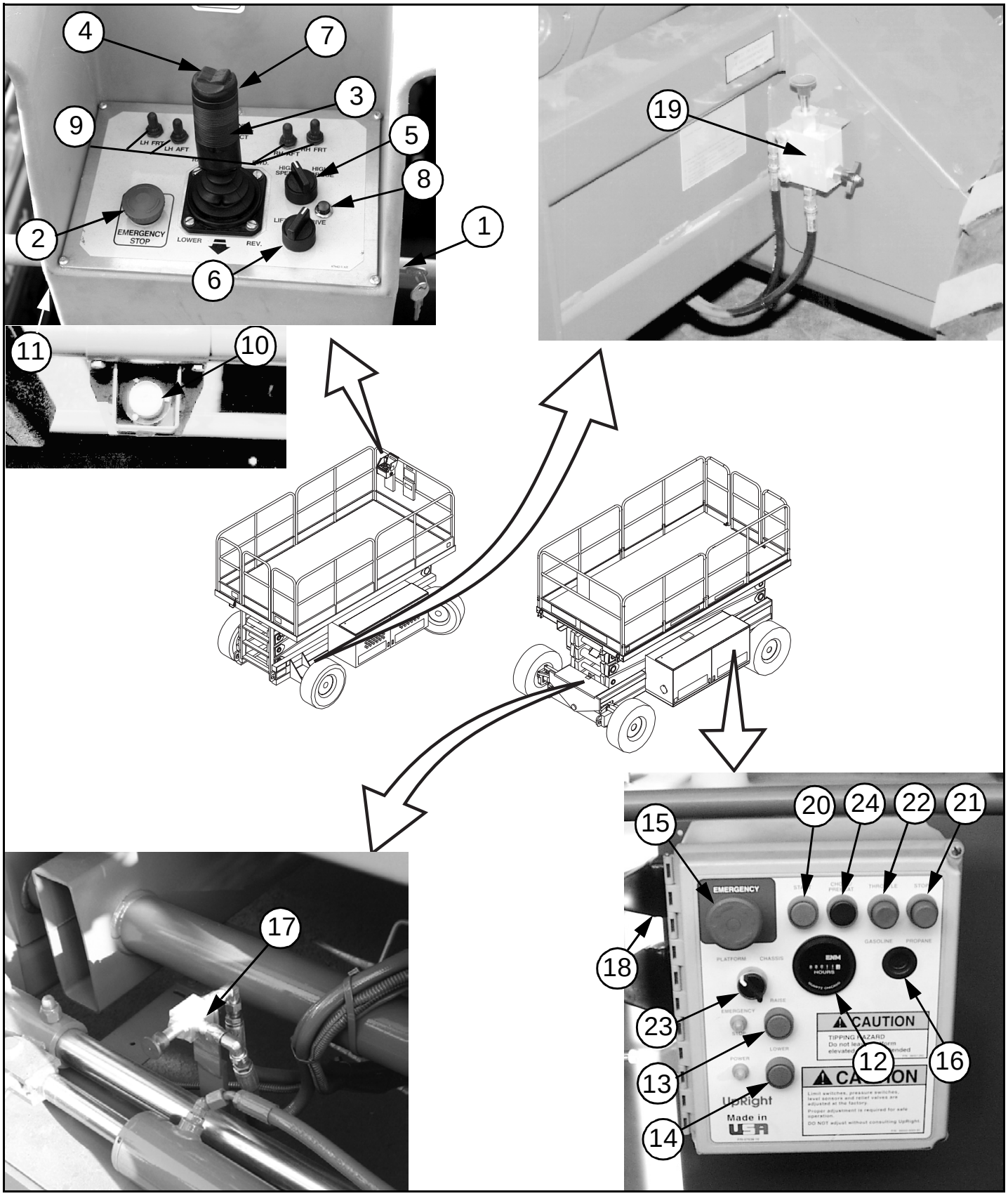

Figure 2-3: Controls & Indicators

2.7 SAFETY RULES AND PRECAUTIONS

ALWAYS observe the following safety rules and precautions when using the LX50 Work Platform:

NEVER operate the machine within ten feet of power lines. THIS MACHINE IS NOT INSULATED.

NEVER elevate the platform or drive the machine while elevated unless the machine is on firm level surface.

NEVER sit, stand or climb on guardrail or midrail.

NEVER operate the machine without first surveying the work area for surface hazards such as holes, drop-offs, bumps and debris.

NEVER operate the machine if all guardrails are not properly in place and secured with all fasteners properly torqued.

SECURE and lock gate after mounting platform.

KEEP all body parts clear of outriggers when extending or retracting.

NEVER use ladders or scaffolding on the platform.

NEVER attach overhanging loads or increase platform size.

LOOK up, down and around for overhead obstructions and electrical conductors.

DISTRIBUTE all loads evenly on the platform. See the back cover for maximum platform load.

NEVER use damaged equipment. (Contact UpRight for instructions. See toll-free phone number on back cover.)

NEVER change operating or safety systems.

INSPECT the machine thoroughly for cracked welds, loose hardware, hydraulic leaks, damaged control cable, loose wire connections and wheel bolts.

NEVER climb down elevating assembly with the platform elevated.

NEVER perform service on machine while platform is elevated without blocking elevating assembly.

NEVER recharge battery near sparks or open flame; batteries that are being charged emit highly explosive hydrogen gas.

AFTER USE secure the work platform against unauthorized use by turning key switch off and removing key.

NEVER replace any component or part with anything other than original UpRight replacement parts without the manufacturer's consent.

ALWAYS read, understand, and follow all safety rules and operating instructions, and the Scaffold Industry Association's MANUAL OF RESPONSIBILITIES (ANSI/SIA A92.6-1999) before operating or performing maintenance on any UpRight self propelled aerial work platform.

2.8 PRE-OPERATION INSPECTION

NOTE:Carefully read, understand and follow all safety rules, operating instructions, labels and the Scaffold Industry Association's MANUAL OF RESPONSIBILITIES. Perform the following steps each day before use.

1. Open modules and inspect for damage, oil leaks or missing parts.
2. Check the hydraulic oil level sight gauge on the hydraulic tank with the platform fully lowered. Add ISO #46 hydraulic oil if necessary.
3. Check that fluid level in the battery is correct (see Section 3.3, Battery Maintenance).
4. Check the engine oil level and fuel level.
5. Check that all guardrails are in place, the slide out deck extension is secured with the pin and all fasteners are properly tightened.
6. Check tire pressure; 50 psi (3.4 bar)
7. Carefully inspect the entire work platform for damage such as cracked welds or structural members, loose or missing parts, oil leaks, damaged cables or hoses, loose connections and tire damage.
8. Move machine, if necessary, to unobstructed area to allow for full elevation.
9. Place chassis and platform emergency stop switches in the ON position by pulling the buttons out.
10. Verify platform/chassis switch is set to PLATFORM.
11. **Dual Fuel Models:** set dual fuel selector to desired position. Set to the center position to purge the system when switching fuels. If the machine is to be operated on propane, open the supply valve on the tank

Note: When using LP gas, use clean, water free liquid petroleum gas, preferably from a bulk storage tank. Follow the instructions located on the power module tray for filling the tank.

WARNING

If you smell propane, close the supply valve on the tank immediately until you have located and corrected the leak.

12. While the engine is cool check the engine coolant level.

CAUTION

DO NOT check coolant when engine or radiator is hot, hot coolant can cause severe burns.

System Function Inspection

WARNING

***STAND CLEAR** of the work platform while performing the following checks.*

Before operating the work platform survey the work area for surface hazards such as holes, drop-offs, bumps and debris.

*Check in **ALL** directions, including above the work platform, for obstructions and electrical conductors.*

Protect control console cable from possible damage while performing checks.

1. Unhook controller from front guardrail. Firmly grasp controller hanger in such a manner that the interlock lever can be depressed, while performing the following checks from the ground.
2. Turn controller key switch clockwise to **ON**. Turn fully clockwise to start engine, releasing the key once the engine starts.

   Note: If the engine is cold, on gasoline / propane models, hold the choke button in while starting the engine. On diesel models, depress the glow plug button and hold for 6 seconds to engage the glow plugs.
3. Position drive/lift switch to **DRIVE** position.
4. With the speed range switch first in **HIGH TORQUE** and then in **HIGH SPEED** depress the interlock lever and slowly push the control lever to **FORWARD** then **REVERSE** positions to check for speed and directional control. The farther you push or pull the control lever the faster the machine will travel.
5. Push steering switch **RIGHT** then **LEFT** to check for steering control.
6. Depress the Interlock switch on the control handle and position each Outrigger switch to the **EXTEND** position to deploy all four Outriggers. Check the Drive Enable indicator, it should be off.
7. Fully retract all Outriggers and check the Drive Enable indicator, it should be on.
8. Rehook controller on front guardrail.
9. Turn the platform/chassis switch to **CHASSIS**.
10. Push the throttle button in. Push chassis raise button to elevate platform while pushing the tilt sensor off of level. The platform should only partially elevate and the tilt alarm should sound. If the platform continues to elevate and/or there is no alarm **STOP** and remove the machine from service until it is repaired.
11. Release the tilt sensor and fully elevate platform.
12. Visually inspect the elevating assembly, lift cylinder, cables and hoses for damage or erratic operation. Check for missing or loose parts.
13. Lower the platform partially by pushing in on the chassis lower switch, and check operation of the audible lowering alarm.
14. Open the chassis emergency lowering valve to check for proper operation by pulling and holding the knob out. Once the platform is fully lowered, close the valve by releasing the knob.
15. Turn the platform/chassis switch to **PLATFORM**.
16. Mount the platform making sure the gate is latched.
17. Position drive/lift switch to **LIFT**.
18. Depress the interlock lever and slowly push the control lever to **UP** to raise the platform, fully actuate the control lever to check proportional lift speed. Slowly pull control lever to **DOWN** position to lower platform. Check that lowering alarm sounds.

19. Depress the interlock lever switch on the control lever and position any Outrigger switch to the **EXTEND** position, Outriggers should be disabled. If an Outrigger extends during this test **STOP**. Lower the platform and remove the machine from service until it is repaired.
20. Turn controller key switch to **OFF**, push the emergency stop button and dismount the platform.
21. Close and secure module covers.

2.9 OPERATION

NOTE: Before operating work platform, ensure that the pre-operation and safety inspection has been completed, any deficiencies have been corrected and the operator has been thoroughly trained on this machine.

Travel With Platform Lowered

1. Verify chassis emergency stop switch is in the ON position (turn counterclockwise), the drive enable indicator is on, and that the platform/chassis switch is on **PLATFORM**.

   Note: If the drive enable indicator is off, verify that the platform is fully lowered and (if so equipped) the outriggers are fully retracted.
2. After mounting platform, close and latch gate. Check that guardrails are in position and properly assembled with fasteners properly torqued.
3. Check that route is clear of persons, obstructions, holes and drop-offs and is capable of supporting the wheel loads.
4. Check clearances above, below and to the sides of the platform.
5. Pull controller emergency stop button out to **ON** position.
6. Turn controller key switch fully clockwise to start engine, releasing the key once the engine starts.

   Note: If the engine is cold, on dual fuel models, depress and hold the choke button in while starting the engine. On diesel models, depress and hold the glow plug button for 6 seconds to engage the glow plugs.
7. Set the drive/lift speed range switch to **HIGH TORQUE**.
8. Grasp the control lever so the interlock lever is depressed (releasing the interlock lever cuts power to controller). Slowly push or pull the control lever to **FORWARD** or **REVERSE** to travel in the desired direction. The farther you push or pull the control lever from center the faster the machine will travel.
9. While moving, push the drive/lift speed range switch to **HIGH SPEED** for travel on level surfaces or to **HIGH TORQUE** for climbing grades or traveling in confined areas.

Steering

1. Push the steering switch **RIGHT** or **LEFT** to turn the wheels. Observe the tires while maneuvering to insure proper direction.

   NOTE: Steering is not self-centering. Wheels must be returned to the straight ahead position by operating the steering switch.

Leveling the Platform (Outrigger equipped machines only)

⚠ WARNING ⚠

Never operate work platform with the parking brakes released. Serious injury or damage could result.

1. Look around the machine, make sure that there is nothing obstructing the outriggers, and that the surface beneath them is suitable to support the weight of the machine.
2. Depress the interlock lever on the control handle and operate the outrigger switches to extend each outrigger until it is making firm contact with the ground.
3. While observing the bubble level on the front guardrail, (Figure 2-3), extend the outrigger opposite the position of the bubble until the platform is level. For example: if the bubble is to the front and left in the orbit, extend the rear right outrigger. Continue to adjust until the bubble is centered in the small circle indicating that the platform is level.
4. Outriggers must be in firm contact with the supporting surface, observe each outrigger to verify.

To Retract the outriggers

1. Fully lower the platform.
2. Position each outrigger switch to **RETRACT**. Observe the outriggers to ensure that they are fully retracted. The drive enable indicator light will not come on until all four outriggers are fully retracted.

Raising and Lowering the Platform

1. Position the drive/lift switch to **LIFT**.
2. While holding the control lever so the interlock lever is depressed, push the control lever slowly to **UP** to raise the platform. Pushing the control lever farther increases the lift speed.
3. When the work task is completed, position the drive/lift switch to **LIFT** and lower the platform by pulling back on the control lever until the platform is fully lowered.

Travel with Work Platform Elevated

Travel with platform elevated **ONLY** on firm and level surfaces.

Note: The work platform will travel at reduced speed when in the elevated position, and only if the front axle is parallel with the rear axle.

1. Check that the route is clear of persons, obstructions, holes and drop-offs, is level and capable of supporting the wheel loads.
2. Check clearances above, below and to the sides of platform.
3. Position the drive/lift switch to the **DRIVE** position.
4. Push the control lever to **FORWARD** or **REVERSE** for the desired direction of travel.

Note:If the machine quits driving and the tilt alarm sounds, immediately lower the platform and move the machine to a level location before re-elevating the platform.

Emergency Lowering

The emergency lowering control is located at the rear of the machine at the base of the scissor assembly (Figure 3-1).

1. Open the emergency lowering valve by pulling on the knob and holding it.
2. Once the platform is fully lowered, release the knob to close the valve.

Switching Fuels (Dual Fuel Only)

1. With engine running turn the fuel selector switch (Figure 2-3) to the center position.
2. After the engine has quit running select the appropriate fuel supply.
3. Restart the engine.

After Use Each Day

1. Ensure that the platform is fully lowered.
2. Park the machine on level ground, preferably under cover, secure against vandals, children or unauthorized operation.
3. Turn the key switch to **OFF** and remove the key to prevent unauthorized operation.

2.10 PARKING BRAKE RELEASE (FIGURE 2-3)

Perform the following only when the machine will not operate under its own power and it is necessary to move the machine or when winching onto a trailer to transport.

1. Close the needle valve by turning the knob clockwise.
2. Pump the brake release pump until the parking brakes release and the wheels can be turned.
3. The machine will now roll when pushed or pulled.
4. Be sure to open the needle valve and verify that the parking brakes have engaged before the machine is operated.

WARNING

Never operate work platform with the parking brakes released. Serious injury or damage could result.

2.11 FOLD DOWN GUARDRAILS (FIGURE 2-4)

This procedure is only for passing through doorways. Guardrails must be returned to proper position before using the machine.

Fold Down Procedure

Note:When performing the following procedures retain all fasteners.

1. Place controller on platform
2. Starting at the front of the platform, remove nuts, bolts and washers from the top of the front guardrail. Fold the front guardrail down onto the platform.
3. Close and latch the gate.
4. Remove nuts, bolts and washers from the top of the rear guardrail. Fold the rear guardrail down onto the platform being careful to keep latched at all times.
5. Remove nuts, bolts and washers from the top of the side guardrails. Lift up and fold one side guardrail in so it rests on the deck. Repeat with other side guardrails.

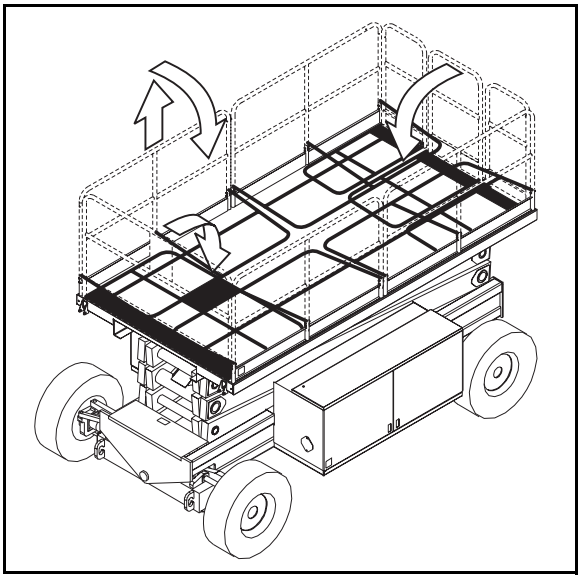

Figure 2-4: Fold Down Guardrails

Erection Procedure

1. Raise side guardrails making sure each is pushed down to secure the guardrail in the vertical position.
2. Install bolts, washers and nuts between the side guardrails, tighten securely.
3. Raise rear guardrail assembly, aligning holes and install bolts, washers and nuts. Tighten securely.
4. Raise front guardrail, aligning holes and install bolts, washer and nuts. Tighten securely.
5. Hang controller from front guardrail.
6. Before operating work platform, check that all fasteners are in place and properly torqued.

WARNING

Before operating machine, guardrails must be securely fastened in their proper position.

Section 3

MAINTENANCE

3.1 INTRODUCTION

⚠ WARNING ⚠

Before performing preventative maintenance, familiarize yourself with the operation of the machine.

Always block the Elevating Assembly, see Figure 3-6, before attempting to perform any maintenance under the scissor assembly.

This section contains instructions for the maintenance of the LX50 Work Platform. Procedures for the operation inspection, adjustment, scheduled maintenance, and repair/removal are included.

Referring to Section 2 will aid in understanding the operation and function of the various components and systems of the work platform, and help in diagnosing and repair of the machine.

Refer to "Preventative Maintenance Check list" on page 3-4 for recommended maintenance intervals.

Note: Unless otherwise specified, torque all fittings according to (see Table 3-3, "Torque Specifications for Fasteners," on page 3-33), and (see Table 3-4, "Torque Specifications for Hydraulic Components," on page 3-33).

3.2 DATE CODE IDENTIFICATION ON HOSES

GATES uses a five digit code: Year, Month, Day.

i.e.: 6 11 29 - means 1996, month 11 (November), day 29.

PARKER uses a ten digit code: Plant, Year, Month, Day.

i.e.: XXXX 6 11 29 - means Plant XXXX, 1996, month 11 (November), day 29.

DAYCO stamps month, day and year on each hose.

3.3 SPECIAL TOOLS

The following is a list of special tools which may be required to perform certain maintenance procedures on the work platform.

- 0-1000 PSI Hydraulic Pressure Gauge with Adapter Fittings
- 0-3000 PSI Hydraulic Pressure Gauge with Adapter Fittings
- Small Deutsch Connector Field Kit (UpRight P/N 030899-000)
- Large Deutsch Connector Field Kit (UpRight P/N 030898-000)
- Inclinometer (P/N 010119-000)
- Flow Meter (P/N 067040-000)

Figure 3-1: Deutsch Connector Kit, Small

Figure 3-2: Deutsch Connector Kit, Large

Deutsch Connectors

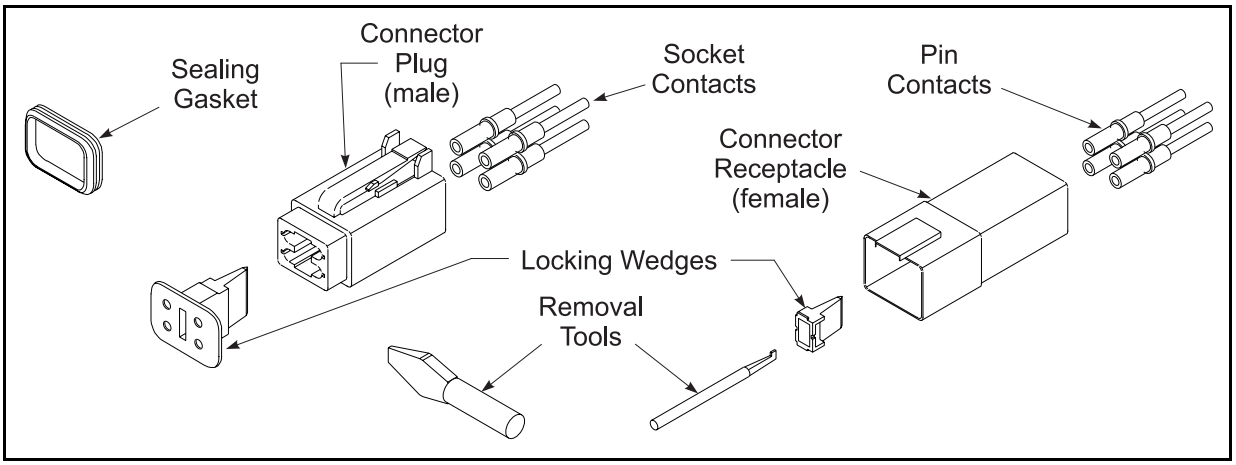

Figure 3-3: Plugs and Receptacles, Deutsch Connectors

Deutsch connectors are designed so that connector parts, contacts or electrical cables may be replaced without replacing the entire connector.

Male Connector (Plug)

1. Disconnect the male connector (plug) from the female connector (receptacle).
2. Using the flat end of the Removal Tool (or flat blade screwdriver), pry the Locking Wedge from the Male Connector. Care should be taken that the Silicon Gasket is not damaged during this procedure.
3. Check all parts for damage. Replace all parts which are damaged or worn.
4. Replace or recrimp the wires and contacts. Refer to “Crimping” procedure.

FEMALE CONNECTOR (Receptacle)

1. Disconnect the male connector (plug) from the female connector (receptacle).
2. Using the notched end of the Removal Tool (or a wire hook), pull the Locking Wedge from the Female Connector.
3. Check all parts for damage. Replace all parts which are damaged or worn.
4. Replace or recrimp the wires and contacts. Refer to “Crimping” procedure.

Releasing Locking Fingers

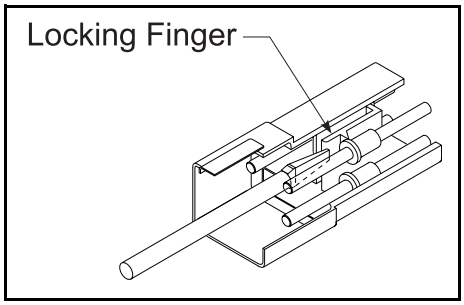

Figure 3-4: Locking Finger, Deutsch Connector

1. The Locking Fingers can be released following the removal of the Locking Wedge of either the male or female connector.
2. Use the removal tool (or flat bladed screwdriver) to push the Locking Fingers aside. This will release the grip on the contact.
3. Pull the wire and contact out of the connector.

Crimping

Note: Complete crimping instructions are included in each Field Kit.

1. Strip 1/4” (6 mm) from the wire.
2. Insert the contact into the crimping tool.
3. Insert the stripped wire into the contact. Copper strands should be visible in the bleed hole of the contact and no copper strands should be loose (outside) of the contact barrel.
4. Completely close the handles of the crimping tool. Release the handles of the crimping tool and remove the crimped contact.
5. Inspect the crimped contact to ensure that all strands are secure in the crimp barrel.

Removing Contact From Heavy Duty Plug

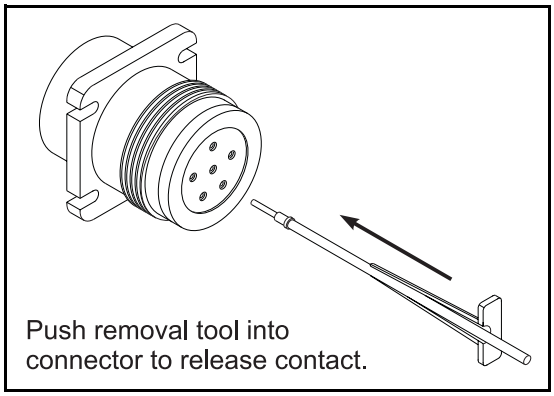

Figure 3-5: Heavy Duty Deutsch Connector

1. Slip the removal tool along the wire to be replaced.
2. Push the removal tool into the connector until the contact is released.
3. Pull the wire and contact out of the plug.

3.4 PREVENTATIVE MAINTENANCE

The Complete inspection consists of periodic visual and operational checks, together with all necessary minor adjustments to assure proper performance. Daily inspection will prevent abnormal wear and prolong the life of all systems. The inspection and maintenance schedule is to be performed at regular intervals. Inspection and maintenance shall be performed by personnel who are trained and familiar with mechanical and electrical procedures.

WARNING

Before performing preventative maintenance, familiarize yourself with the operation of the machine.

Always block the elevating assembly whenever it is necessary to enter the scissor assembly to perform maintenance while the platform is elevated.

The preventative maintenance table has been designed to be used primarily for machine service and maintenance repair. Please photocopy the following page and use this table as a checklist when inspecting the machine for service.

Preventative Maintenance Table Key

Interval

Daily=each shift or every day
50h/30d=every 50 hours or 30 days
250h/6m=every 250 hours or 6 months
1000h/2y=every 1000 hours or 2 years

Y=Yes/Acceptable N=No/Not Acceptable
R=Repaired/Acceptable

Preventative Maintenance Report

Date:_____
Owner: _____
Model No:_____
Serial No: _____
Serviced By:_____
Service Interval: _____

Table 3-1: Preventative Maintenance Check list

COMPONENT	INSPECTION OR SERVICES	INTERVAL	Y	N	R
Battery	Check electrolyte level	6m			
	Check specific gravity	6m			
	Clean exterior	6m			
	Check battery cable condition	Daily			
	Clean terminals	6m			
Engine Oil and Filter	Check level and condition	Daily			
	Check for leaks	Daily			
	Change oil filter	100h			
Engine Fuel System	Check fuel level	Daily			
	Check for leaks	Daily			
	Replace fuel filter	6m			
	Check air cleaner	Daily			
Engine Coolant	Check coolant level (with engine cold)	Daily			
	Replace coolant	3m			
Hydraulic Oil	Check oil level	Daily			
	Change filter	6m			
	Drain and replace oil	2y			
Hydraulic System	Check for leaks	Daily			
	Check hose connections	30d			
	Check hoses for exterior wear	30d			
Emergency Hydraulic System	Operate the emergency lowering valve and check for serviceability	Daily			
Controller	Check switch operation	Daily			
Control Cable	Check the exterior of the cable for pinching, binding or wear	Daily			
Platform Deck and Rails	Check fasteners for proper torque	Daily			
	Check welds for cracks	Daily			
	Check condition of deck	Daily			
Tires	Check for damage	Daily			
	Check lug nuts (torque to 90 ft. lbs.)	30d			
Hydraulic Pump	Wipe clean	30d			
	Check for leaks at mating surfaces	30d			
	Check for hose fitting leaks	Daily			
	Check mounting bolts for proper torque	30d			
Drive Motors	Check for operation and leaks	Daily			
Torque Hubs	Check for leaks	Daily			
	Check oil level	250h/6m			
	Change Oil after break-in	50h/30d			
	Change Oil	1000h/2y			

COMPONENT	INSPECTION OR SERVICES	INTERVAL	Y	N	R
Steering System	Check hardware & fittings for proper torque	6m			
	Grease pivot pins	30d			
	Oil king pins	30d			
	Check steering cylinder for leaks	30d			
Elevating Assembly	Inspect for structural cracks	Daily			
	Check pivot points for wear	30d			
	Check mounting pin pivot bolts for proper torque	30d			
	Check elevating arms for bending	6m			
Chassis	Check hoses for pinch or rubbing points	Daily			
	Check component mounting for proper torque	6m			
	Check welds for cracks	Daily			
Lift Cylinders	Check the cylinder rod for wear	30d			
	Check mounting pin pivot bolts for proper torque	30d			
	Check seals for leaks	30d			
	Inspect pivot points for wear	30d			
	Check fittings for proper torque	30d			
Axle Cylinder	Check the cylinder rod for wear	30d			
	Check mounting pin pivot bolts for proper torque	30d			
	Check seals for leaks	30d			
	Inspect pivot points for wear	30d			
	Check fittings for proper torque	30d			
Entire Unit	Check for and repair collision damage	Daily			
	Check fasteners for proper torque	3m			
	Check for corrosion-remove and repaint	6m			
	Lubricate	30d			
Labels	Check for peeling, missing, or unreadable labels & replace	Daily			

3.5 BLOCKING ELEVATING ASSEMBLY (FIGURE 3-6)

WARNING

Never perform service on the work platform in the elevating assembly area while platform is elevated without first blocking the elevating assembly.

***DO NOT** stand in elevating assembly area while deploying or storing brace.*

Installation

1. Park the work platform on firm level ground.
2. Verify Platform Emergency Stop Switch is **ON**.
3. Turn Chassis Key Switch to **CHASSIS**.
4. Start the engine using chassis controls.
5. Push the throttle button in, the button will stay in and the engine speed will increase. Using the raise button, elevate platform until the scissors brace can be rotated to the vertical position.
6. From the left side of the machine, disengage the locking pin securing the brace. Rotate the scissor brace counterclockwise until it is vertical and between the two scissor center pivots.
7. Push lower button and gradually lower platform until brace is supporting the platform.
8. Disengage throttle by pushing throttle button in again, the button will retract and the engine will come to idle speed.

Removal

1. Using chassis controls, gradually raise platform until the scissors brace clears the two scissor center pivots.
2. Rotate scissors brace clockwise until the locking pin engages.
3. Push lower button to completely lower platform.
4. Make sure the throttle button is disengaged and platform/chassis switch is on **PLATFORM**.

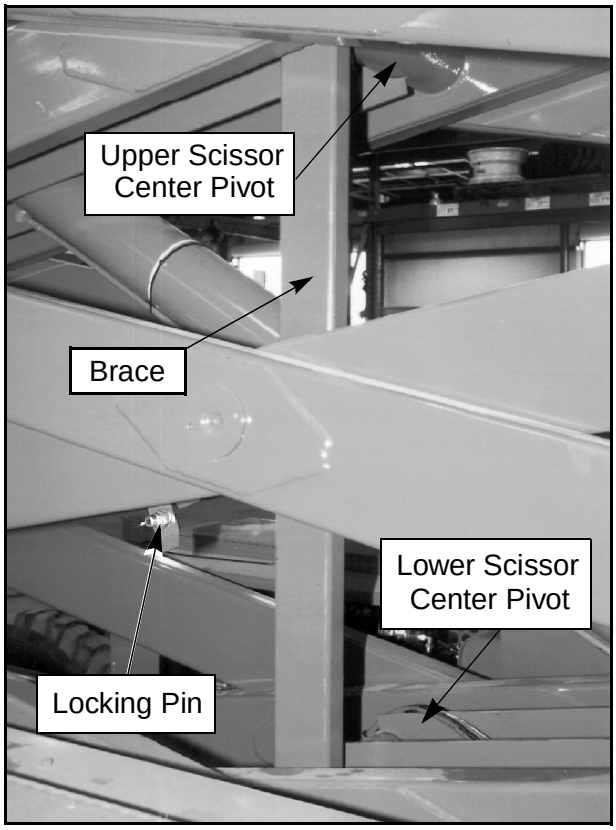

Figure 3-6: Blocking Elevating Assembly

3.6 BATTERY MAINTENANCE

WARNING

Hazard of explosive gas mixture. Keep sparks, flame, and smoking material away from battery.

Always wear safety glasses when working with batteries.

Battery fluid is highly corrosive. Thoroughly rinse away any spilled fluid with clean water.

Battery Inspection and Cleaning

Check battery fluid level daily, especially if work platform is being used in a warm, dry climate. If required, add distilled water ONLY. Use of tap water with high mineral content will shorten battery life.

The battery and cables should be inspected regularly for signs of cracks in the case, electrolyte leakage and corrosion of the terminals. Inspect cables for worn spots or breaks in the insulation and for broken cable terminals.

Clean the battery when it shows signs of corrosion at the terminals or when electrolyte has overflowed during charging. Use a baking soda solution to clean the battery, taking care not to get the solution inside the cells. Rinse thoroughly with clean water. Clean battery and cable contact surfaces to a bright metal finish whenever a cable is removed.

3.7 LUBRICATION

Refer to Table 3-1 for the lubrication intervals and Figure 3-7 for location of items that require lubrication service. Refer to the appropriate sections for lubrication information on the Steering Linkage, Torque hubs, Hydraulic Oil and Filter, and Engine Oil and Filter.

Grease Fittings

Wipe each grease fitting before and after greasing. Using multipurpose grease in a grease gun, pump the grease into the fitting until grease just begins to appear at the edges of the pivot, wipe off any excess grease.

Steering Linkage

Apply one or two drops of penetrating oil to each pivot and King Pin bearing.

Torque Hubs

Note: Change oil in torque hubs after the first 50 hours of operation. Change every 1000 hours thereafter.

1. Remove Torque Hub from rear drive assembly (refer to Section 3.12).
2. Remove drain plug from underside of Torque Hub.
3. Drain oil from unit.
4. Replace drain plug.
5. Remove fill plug from top side of Torque Hub.
6. Fill unit with 90 wt. gear oil.
7. Replace fill plug.

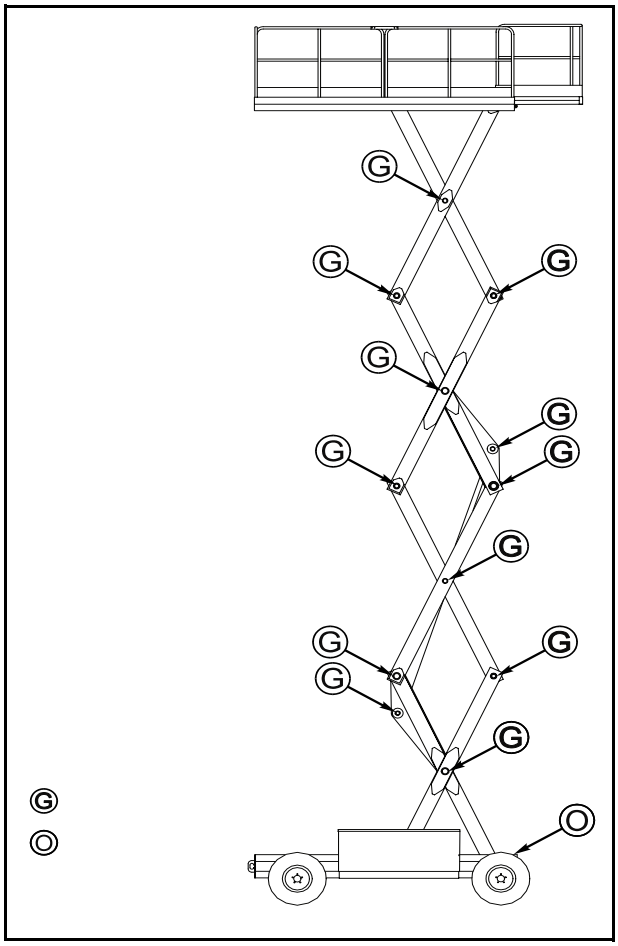

Figure 3-7: Lubrication Chart

Hydraulic Oil Tank and Filter (Figure 3-8)

Fluid Level

With the platform *fully lowered*, the oil should be visible in the Sight Gauge. If the oil is NOT visible, fill the tank until the oil can be seen. DO NOT fill above the Sight Gauge or when the Platform is elevated.

Oil and Filter Replacement

1. Operate the work platform for 10-15 minutes to bring the hydraulic oil up to normal operating temperature.

⚠ CAUTION ⚠

The hydraulic oil may be hot enough to cause burns. Wear safety gloves and safety glasses when handling hot oil.

2. Provide a suitable container to catch the drained oil. The hydraulic tank has a capacity of 12.0 U.S. gallons (45.5 l).
3. Remove the drain plug and allow all oil to drain into the container, be sure to dispose of oil properly.
4. Reinstall the drain plug.
5. Remove the three screws from the filter body cover and open the filter body.
6. Lift the filter element from the filter body.
7. Fill the hydraulic oil tank to the level of the sight gauge with ISO #46 hydraulic oil.
8. Insert the replacement filter element into the filter body and press into position.
9. Replace the filter body cover and screws.

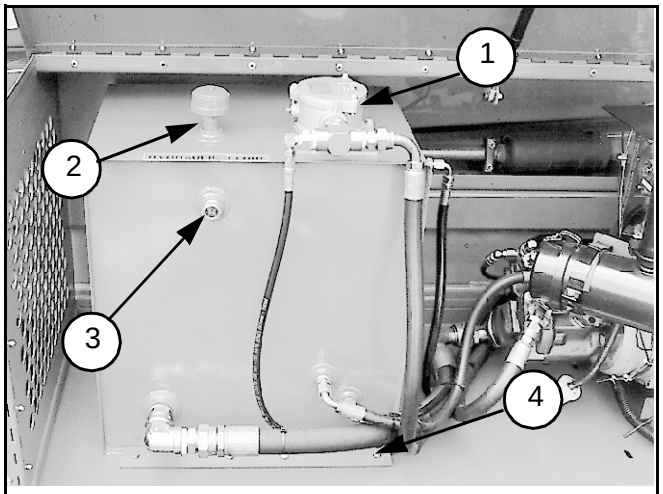

1. Filter body
2. Breather
3. Sight Gauge
4. Drain plug (under tank)

Figure 3-8: Hydraulic Oil Tank & Filter

Engine Oil & Filter (Figure 3-9)

1. Provide a suitable container to catch the drained oil. Engine oil capacity is 4 quarts (3.25 l).
2. Place the container under the oil pan and remove the drain plug.
3. When the drain plug is removed, unscrew the filler cap to speed up draining the oil.
4. After all of the oil has been drained, replace the drain plug.
5. Remove the filter using an oil filter wrench.
6. Replace with new filter, refer to section 6 for part number. Tighten filter by hand.

Note: Lubricate filter seal with clean engine oil prior to assembly.

7. Fill engine with motor oil per Table 3-2.
8. Replace filler cap.

Engine	Capacity	Temp	Oil
Gas/Propane	4 US qts [3.25 l]	above 10° f below 10° f	10w-30 5w-30
Diesel	5.4 US qts. [5.1 l]	All	10w-30

Table 3-2: Engine Oil

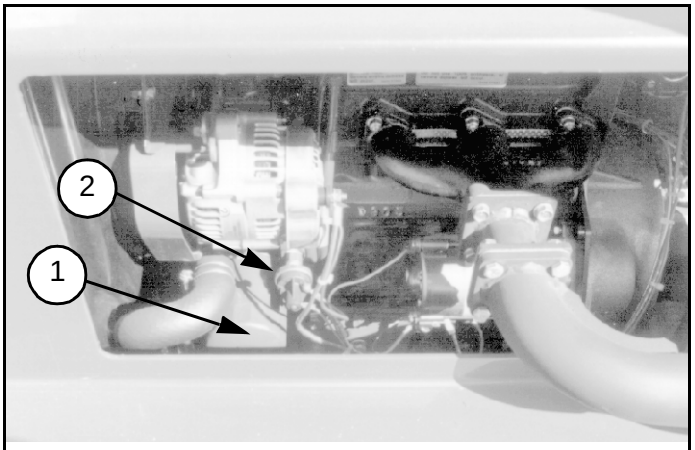

1. Engine Oil Filter
2. Oil Pressure Switch

Figure 3-9: Engine Oil Filter

3.8 SETTING HYDRAULIC PRESSURES

Note: Follow Pump Set - Up procedure whenever Pump has been replaced, or when testing performance to isolate possible failure. Refer to Figure 3-11 for flow meter setup.

Pump Setup (Figure 3-10)

1. Remove Pump output line and cap it.
2. Install flow meter input line to Pump output.
3. Remove Tank return line and cap.
4. Install flow meter output line to Tank.
5. Remove sense line from Pump.
6. Install flow meter sense line to Pump.
7. Remove caps on Standby and Max Pressure adjustment screws.
8. Press and hold Throttle Button to rev up engine.
9. Close simulated load flow control valve by turning fully clockwise.
10. Turn Standby pressure adjustment screw fully clockwise.
11. Adjust Max Pressure to 3000 P.S.I. (207 bar) (clockwise to increase, counterclockwise to decrease).
12. Turn Standby pressure adjustment screw counterclockwise until gauge reads 200 P.S.I. (14 bar).
13. Replace caps on Standby and Max Pressure adjustment screws.
14. Open simulated load flow control valve by turning fully counterclockwise.
15. Open simulated load pressure relief valve by turning fully counterclockwise.
16. Loosen large locknut on Horsepower Limiter Valve and turn adjustment screw counterclockwise two full turns.
17. Increase simulated load pressure relief valve by turning clockwise until gauge reads 1500 P.S.I. (105 bar).
18. Turn Horsepower Limiter adjustment screw clockwise until flow meter reads 12 G.P.M.
19. Tighten large locknut on Horsepower Limiter Valve.
20. Loosen small locknut on Horsepower Limiter Valve and turn adjustment screw counterclockwise two full turns.
21. Increase simulated load pressure relief valve by turning clockwise until gauge reads 2500 P.S.I. (172 bar).
22. Turn Horsepower Limiter Valve adjustment screw clockwise until flow meter reads 7 G.P.M.
23. Tighten small locknut on Horsepower Limiter Valve
24. Replace hoses.

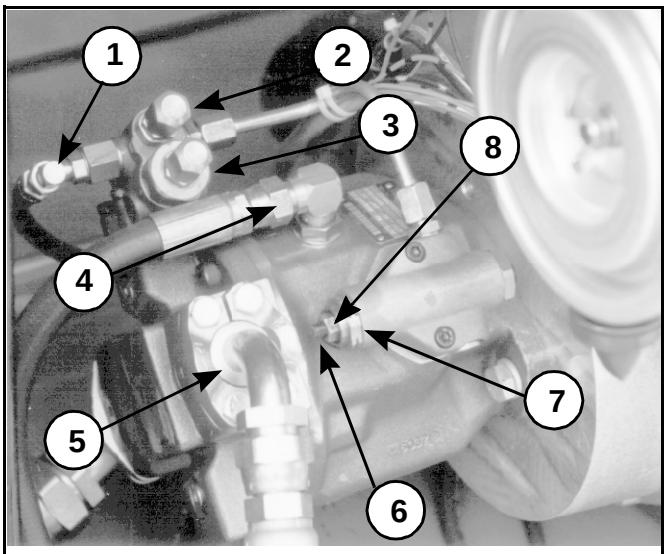

1. Sense Line
2. Standby PSI Adjustment
3. Max PSI Adjustment
4. Drain Line
5. Output Line
6. Horsepower Limiter Adjustment Screw
7. Low PSI Locknut
8. High PSI Locknut

Figure 3-10: Hydraulic Pump

Lift Relief Valve

1. Operate the hydraulic system 10-15 minutes to warm the oil.
2. Remove the cap or loosen the locknut on the Lift Relief Valve.
3. Turn the Lift Relief Valve adjustment screw counterclockwise two full turns.
4. Place rated load on the platform (1000 lbs. [454 kg.]).
5. Depress the Throttle Button, and the Raise Button to lift the platform.
6. Slowly turn the Lift Relief Valve adjustment screw clockwise until the platform begins to rise.
7. Replace the cap, or tighten the locknut on the Lift Relief Valve, and remove the load from the platform

Counterbalance Valves

1. Operate the hydraulic system 10-15 minutes to warm the oil.
2. Elevate the Front (4WD only), and Rear Wheels to allow them to spin freely, and place on jack-stands suitable to support the weight of the machine.
3. Remove the Green/White wire from wire terminal in the Control Panel Assembly.
4. Install a 0-1000 P.S.I. pressure gauge at the Forward Drive Pressure Test Port.
5. Loosen the locknut on the **Reverse** Counterbalance Valve, push the control handle **FORWARD**, and adjust the valve until the gauge reads 800 P.S.I. (55 bar) (CW to decrease P.S.I., CCW to increase P.S.I.) Tighten the locknut.
6. Install a 0-1000 P.S.I. pressure gauge at the Reverse Drive Pressure Test Port.
7. Loosen the locknut on the **Forward** Counterbalance Valve, push the control handle **REVERSE**, and adjust the valve until the gauge reads 800 P.S.I. (55 bar), tighten the locknut.
8. Recheck the pressures and adjust as necessary.
9. Remove the gauge and replace the cap. Replace the Green/White wire to terminal. Lower the machine off of the jackstands.

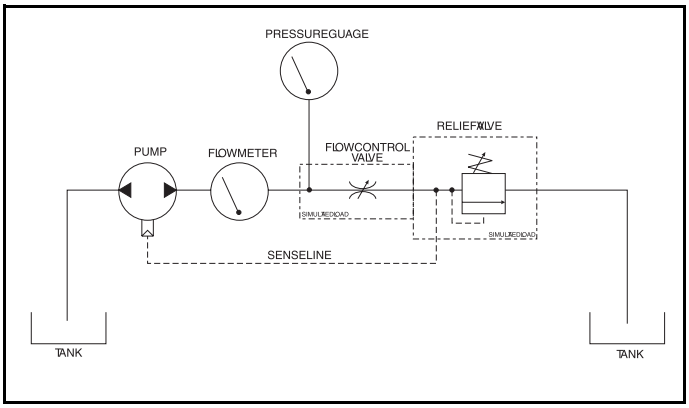

Figure 3-11: Flow Meter Setup

Steering Relief Valves

1. Operate the hydraulic system 10-15 minutes to warm the oil.
2. Install a 0-3000 P.S.I. gauge at the Main Pressure Test Port.
3. Loosen the locknut or remove the cap on the Left Steer Relief Valve.
4. Turn the adjustment screw two full turns counter-clockwise.
5. Press the Steering Switch to the left and hold until the system bypasses.
6. Turn the Steering Relief Valve adjustment screw clockwise until the gauge reads 1500 P.S.I. (103 bar)
7. Tighten locknut or replace cap on Left Steering Relief Valve.
8. Repeat process for Right Steering Relief Valve

Bidirectional Relief Valves

Note: Check or reset Drive Motor Relief Valves only if you suspect that one of the Rear wheels is not turning due to premature bypass. This condition is rare and Bidirectional Relief Valves should not be reset as part of normal maintenance.

1. Operate the hydraulic system 10-15 minutes to warm the oil.
2. Remove the cap and install a 0-3000 P.S.I. pressure gauge at the Main Pressure Test Port.
3. Remove the Bidirectional Relief Valve from under the rear drive motor and exchange with the Lift Relief Valve.
4. Remove the cap from the Bidirectional Relief Valve and turn the adjustment screw two full turns counterclockwise.
5. Depress the Throttle Button and the Raise Button to lift the platform to full height and hold until system bypasses.
6. Turn the adjustment screw clockwise until the pressure reaches 3000 P.S.I. (207 bar).
7. Replace the cap and return the Bidirectional Relief Valve and the Lift Valve to their original positions.
8. Repeat if necessary for the other Bidirectional Relief Valve.
9. Remove the gauge and replace the Test Port Cap.

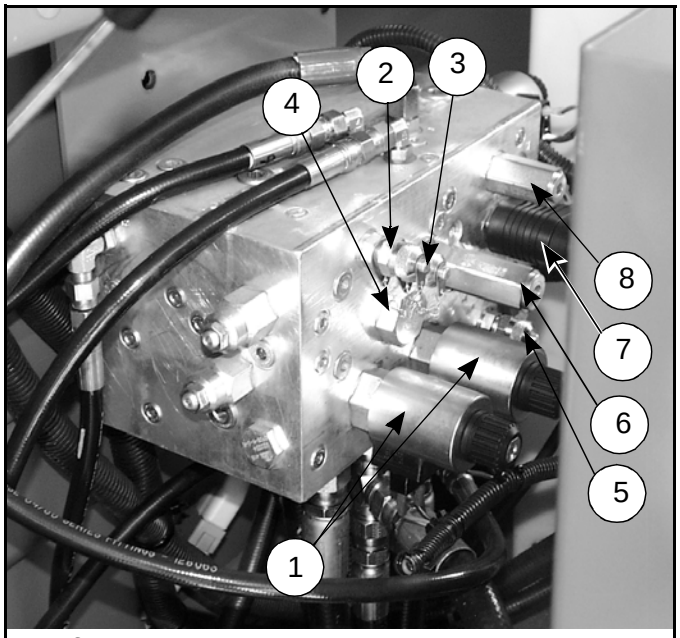

1. Series/Parallel Valves
2. Test Port, Reverse
3. Test Port, Forward
4. Plug (Flow Divider/ Combiner on 4WD)
5. Main Test Port
6. Main Relief Valve
7. Steering Valves
8. Bi-Directional Relief Valve

Figure 3-12: Valve Manifold

3.9 SWITCH ADJUSTMENTS

Proportional Control Adjustment (Figure 3-13)

When required by the following procedure, lay out a twenty foot course, on level ground, free from potholes or other obstructions. Mark a starting line and finish line visible from the platform of the machine.

Potentiometers are sealed to protect sensitive adjustments from vibrations, or from tampering. Remove sealant prior to adjustment, and replace after.

Use a small screwdriver or special adjustment tool to set adjustment pots. Pots can be easily damaged.

Pots have 15 turns of adjustment, more than one turn will often be required to complete the adjustment. If pots have been previously set, reset by turning no more than turn at a time. If they have not been previously set, preset to about mid range and start from there.

Turn pot clockwise (CW) to increase settings.

Turn pot counterclockwise (CCW) to decrease settings.

Adjust pots only in sequence as outlined in this procedure.

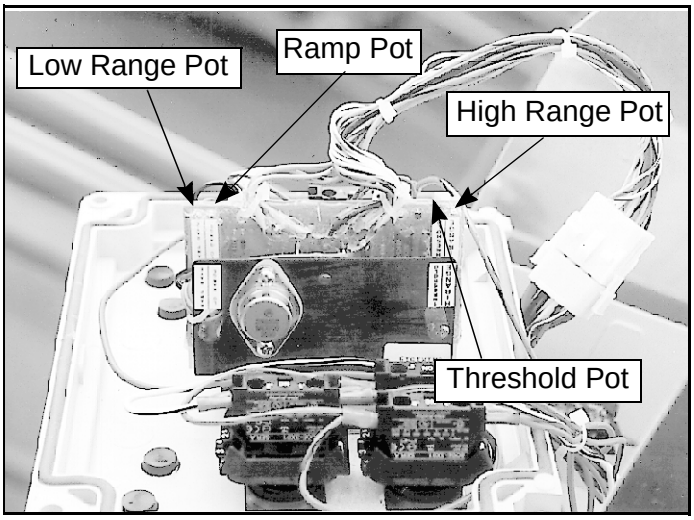

Figure 3-13: Proportional Controller

Procedure

1. Lower machine fully to insure that controller is in high speed range.
2. Turn Ramp Trimpot fully counterclockwise until a click is heard with each revolution.
3. Push Control Handle slightly forward, just enough to illuminate the red L.E.D. on the P.C.B.

   Note: Do not steer the wheels during speed test, ensure that the front wheels are straight prior to this operation. Allow the machine to rise to full speed, and mark the time from the second that the front wheels cross the starting line, until the second that the front wheels cross the finish line.

4. Adjust the Threshold Trimpot so that the machine just begins to move.
5. Push the Control Handle fully forward and drive the machine over the 20 foot course.
6. Adjust the Hi Trimpot to the proper high speed.
7. Elevate the platform enough to put the machine into low speed range.
8. Push the Control Handle fully forward and drive the machine over the 20 foot course.
9. Adjust the Lo Trimpot to the proper low speed.
10. Lower the machine fully and turn the Ramp Trimpot 8 to10 turns clockwise. Adjust for smooth acceleration.
11. Recheck speeds to insure proper adjustment. Reset as necessary.

Platform Down Limit Switches

The Platform Down Switches (Figure 3-14) close the circuit to the Cutout Relay, bypassing the Tilt Sensor when the platform is lowered; and to the Platform Down Relay, which provides power to the Drive Relay, Proportional Controller high speed circuit, and Series/Parallel Relay.

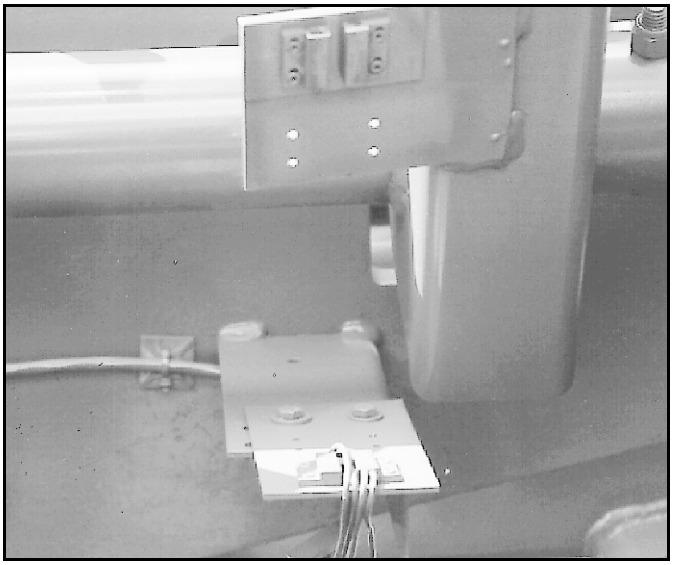

Figure 3-14: Platform Down Limit Switch

1. Lower the Platform completely.
2. With the Platform / Chassis switch on Chassis, push the Tilt Sensor base to test the alarm circuit.

WARNING

DO NOT attempt to adjust Limit Switches without first blocking the elevating assembly (Figure 3-6).

3. If the alarm sounds, elevate the Platform and adjust the position of the switch mounting bracket by loosening the capscrews and nuts holding the bracket in place and moving the bracket until the switches align with the magnets. Lower the Platform and retest. When switches are aligned, alarm will not sound while platform is lowered.
4. With platform elevated, repeat step 2. When switches are properly adjusted, alarm will sound.

Axle Center Switch (Figure 3-15)

1. Place the work platform on a level surface with the front and rear axles parallel (on the same plane). Verify this using an inclinometer.
2. Loosen the setscrew on the lever of the limit switch. It should immediately spring to center. Tighten the setscrew.
3. Test the switch function by moving the machine to a location where the front axle will articulate off of center and raising the platform until the magnetic switches open (about 10 feet [3 meters]). The work platform should not drive. Retest with the axle off center in the other direction.

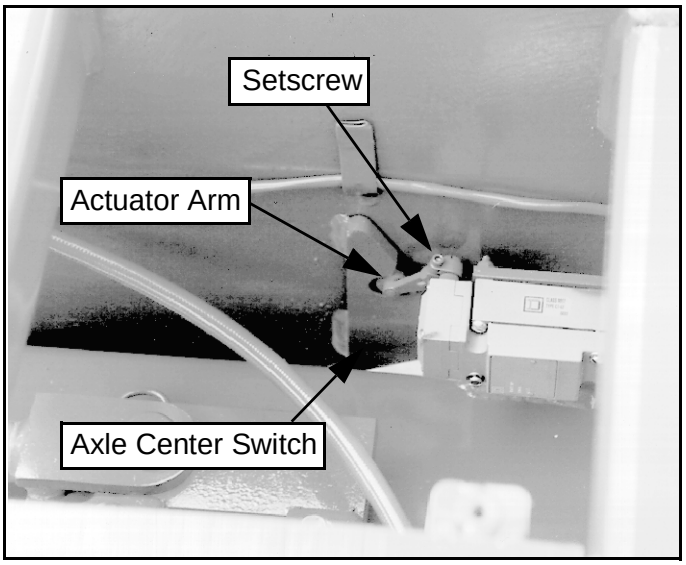

Figure 3-15: Axle Center Switch

Tilt Sensor (Figure 3-16)

The Tilt Sensor has three wires; red-power (12v in), black-ground, white-output (12v out). To verify the sensor is working properly there is one LED under the sensor, red indicates the sensor is out of level and the white wire is 'hot' (12v out).

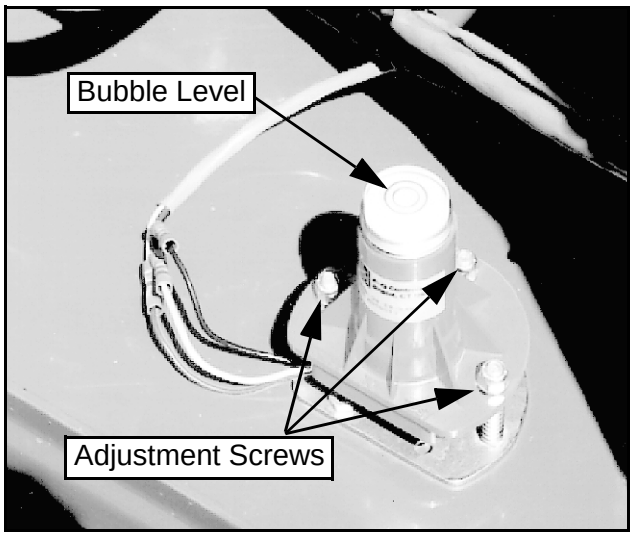

Figure 3-16: Tilt Sensor

1. Check tires for proper pressure.
2. Place machine on firm level surface ±1/4°.
3. Use Inclinometer to ensure that the front and rear of the Chassis are level within ±1/4°.
4. Adjust the three leveling locknuts until the bubble is centered in the circle on the attached bubble level.
5. Elevate the platform until the magnetic switches open (about 10 feet [3m]) and push the tilt sensor base to test the alarm circuit. Alarm should sound.

3.10 Hydraulic Manifold (Figure 3-17)

Though it is not necessary to remove the manifold to perform all maintenance procedures, a determination should be made prior to beginning as to whether or not the manifold should be removed before maintenance procedures begin.

Removal

1. Disconnect the battery ground cable.
2. Unplug valve block wiring harness.
3. Tag, disconnect and plug hydraulic hoses.
4. Remove the bolts that hold the manifold mounting bracket to the module floor.
5. Remove manifold block.

Disassembly

NOTE: Mark all components as they are removed so as not to confuse their location during assembly. Refer to Figure 3-17 often to aid in disassembly and assembly.

1. Remove coils from solenoid valves.
2. Remove spool valve cover and spool valve.
3. Remove solenoid valves, lift relief valve, counter-balance valves and divider/combiner valve.
4. Remove fittings, plugs, springs, balls and orifices.

Cleaning and Inspection

1. Wash the manifold in cleaning solvent to remove built up contaminants and then blow out all passages with clean compressed air.
2. Inspect the manifold for cracks, thread damage and scoring where O-rings seal against internal and external surfaces.
3. Wash and dry each component and check for thread damage, torn or cracked O-rings and proper operation.
4. Replace parts and O-rings found unserviceable.

Assembly

NOTE: Lubricate all O-rings before installation to prevent damage to O-rings. Seat all balls in manifold block by lightly tapping on the ball with a brass drift punch.

1. Install fittings, plugs, springs, balls and orifices. Use one drop of Locktite #242 on each screw-in orifice.
2. Install solenoid valves, lift relief valve, counter balance valves, divider combiner valve, and spool valve.
3. Install coils on solenoid valves.

Installation

1. Attach manifold assembly to mounting plate with bolts.
2. Connect Solenoid leads to terminal strip (as previously tagged).
3. Connect hydraulic hoses. Be certain to tighten hoses to manifold.
4. Operate each hydraulic function and check for proper operation and leaks.
5. Adjust Lift Relief, Steering Relief, and Counter-balance Valve pressures according to instructions in Section 3.8

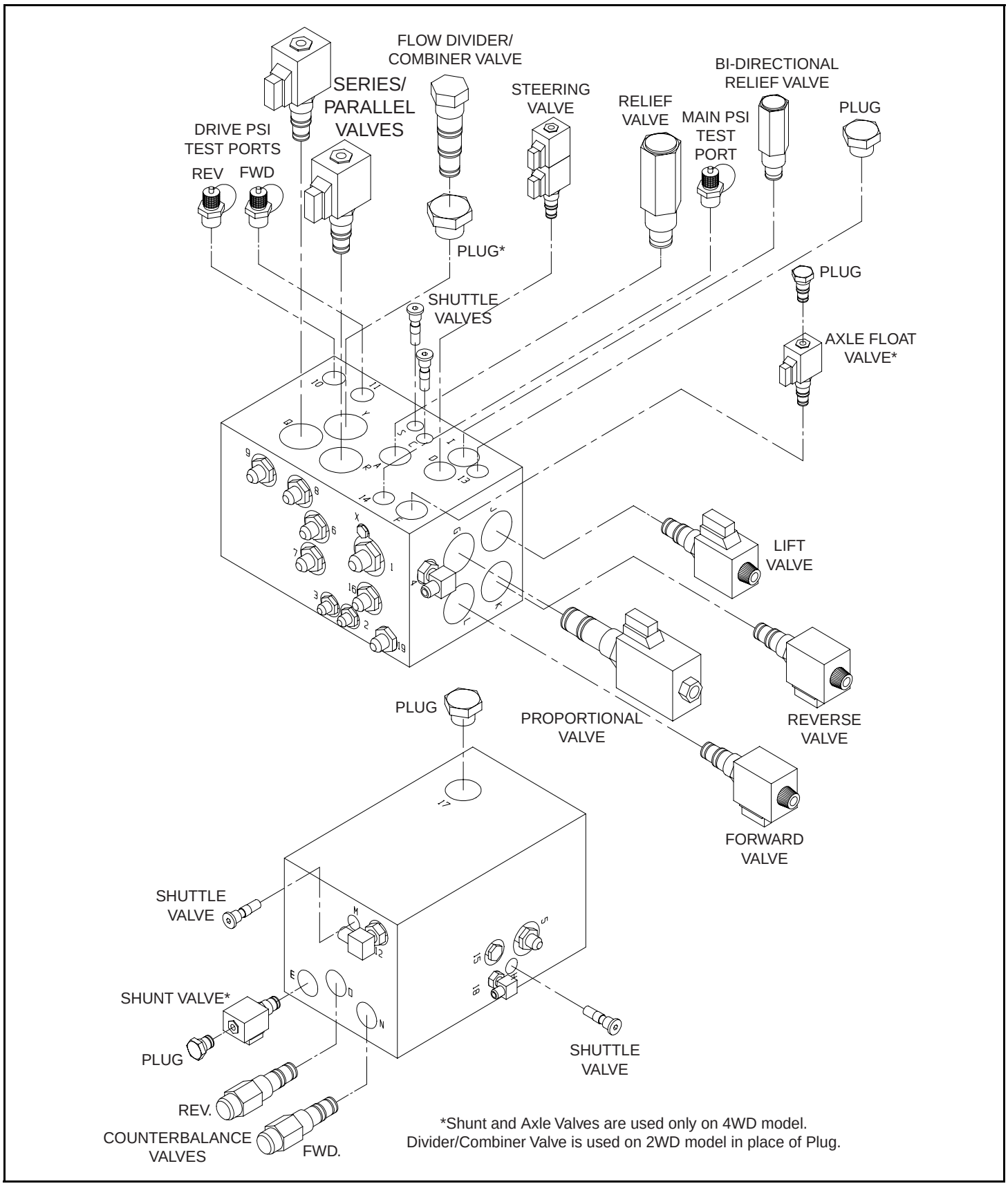

Figure 3-17: Hydraulic Manifold, Exploded View (4WD Shown)

3.11 HYDRAULIC PUMP (FIGURE 3-18)

NOTE: If the hydraulic tank has not been drained, suitable means for plugging the hoses should be provided to prevent excessive fluid loss.

Removal

1. Mark, disconnect and plug the hose assemblies.
2. Loosen the capscrews and remove the pump assembly from the engine.

Installation

1. Torque each capscrew a little at a time until both capscrews are torqued to 20 ft. lbs. (27 N-m).
2. Unplug and reconnect the hydraulic hoses.
3. Fill the pump completely with clean hydraulic oil by pouring it into the drain line cavity.
4. Check the oil level in the hydraulic tank before operating the work platform.
5. Set standby and maximum pressures, and horsepower limiter nodes as outlined under Pump Setup in Section 3.8, Setting Hydraulic Pressures.

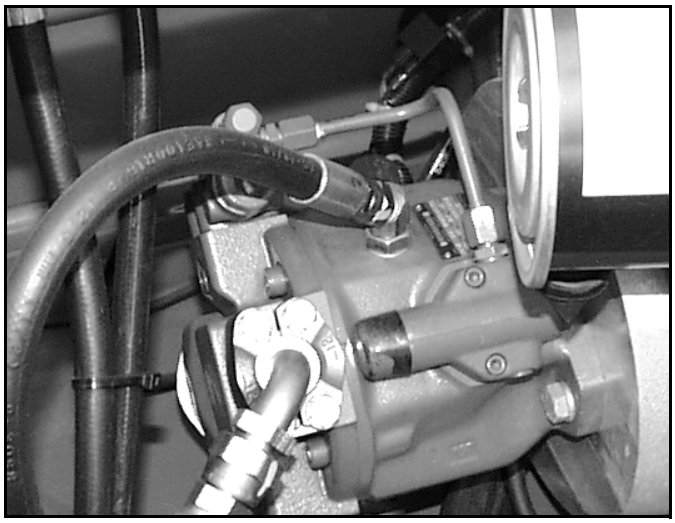

Figure 3-18: Hydraulic Pump

3.12 HYDRAULIC BRAKES, DRIVE MOTORS, AND HUBS

Rear Axle Removal (Figure 3-19)

1. Park the work platform on firm level ground and block the wheels to prevent the work platform from rolling.
2. Loosen the wheel lug bolts on the motor to be removed.
3. Raise the rear of the work platform using a 2-ton jack.
4. Position 2 1-ton jack stands under the rear axle to prevent the work platform from falling if the jack fails.
5. Remove the wheel lug bolts and wheel.
6. Tag and disconnect the hose assemblies from the drive motor and brake.

⚠ CAUTION ⚠

Clean all fittings before disconnecting the hose assemblies.

Plug all port holes and hose assemblies IMMEDIATELY to prevent contamination from dust and debris.

Note: When disassembling, retain gaskets between components, they may be reused if undamaged.

7. Remove the four capscrews holding the motor to the brake. Remove the motor.
8. Remove the two socket head through bolts connecting the brake and the torque hub. Remove the brake.
9. Remove the eight capscrews connecting the torque hub to the rear axle. Remove the torque hub.

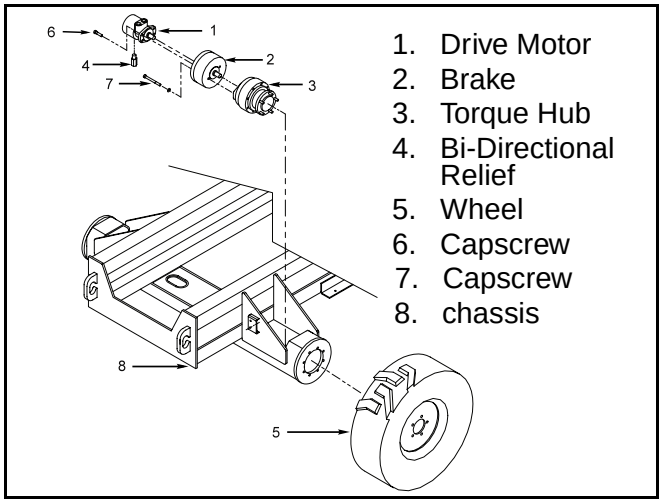

Figure 3-19: Rear Axle assembly

Installation

1. Install the torque hub to the rear axle. Align the holes and install the eight capscrews, tighten.
2. Coat the output shaft of the brake with high pressure molybdenum grease and install brake into torque hub. Align holes and install the two socket head through bolts, tighten.
3. Coat the output shaft of the drive motor with high pressure molybdenum grease and install into brake. Align holes and install the four capscrews, tighten.
4. Reinstall the hose assemblies to the drive motor and brake.
5. Reinstall the wheel and wheel nuts onto the torque hub. Torque the wheel nuts to 150 ft. lbs. [203 Nm].
6. Remove the jack stands used to block the wheels. Lower the jack and remove.
7. Operate the drive system to check for leaks. If the brake was serviced, bleed out the air using the bleed valve located on the brake housing.

Seal Replacement (Figure 3-20)

1. With shaft protrusion downward, remove the capscrews (22) from the brake assembly.
2. Remove the power plate (20), from the housing (1).
3. Remove the gasket (2), discard.
4. Remove the piston (13) from the power plate (20) by introducing low pressure air (15 psi) into the hydraulic inlet. Make sure the piston is pointed away from anyone.
5. Remove O-rings (15 & 17) and backup rings (14 & 16) from the inner and outer diameter grooves of the piston, discard.
6. Clean the piston (13) from the power plate (20) assemblies with solvent. Inspect the sealing surfaces of the piston (13) and power plate (20). Inspect the seal grooves in the piston. Replace these parts if they are damaged or scratched deeply. Lubricate piston (13), power plate (20), and seals (14-17) with clean hydraulic oil prior to assembly.
7. Install the backup rings (14 & 16) and O-rings (15 & 17) into the seal grooves in the piston.
8. Install the piston into the power plate using a shop press. Be careful not to damage the seals during assembly. Center the cutouts in the piston with the torque pin holes in the power plate. Press the piston to a depth no less than flush, but not exceeding 0.120 in below the surface of the power plate at the cutouts in the piston. This depth is critical, the brake will not hold if it is exceeded.
9. Install gasket (2).
10. Install power plate/piston assembly (13 & 20) to housing (1) using capscrews (22). Tighten sequentially, one at a time, to press the two assemblies together. Torque capscrews 50 to 60 ft. lbs.

1. Plug
2. Housing
3. Gasket
4. Ball Bearing
5. Retaining Ring
6. Oil Seal
7. Spring, Retainer
8. Spring, Compression
9. Spring, Compression
10. Shaft, Splined
11. Pin, Torque
12. Disk, Primary

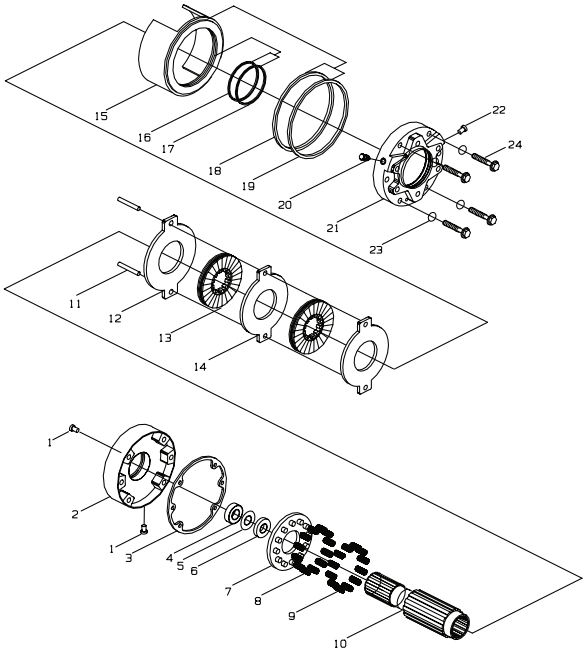

13. Disk, Rotating
14. Disk, Stationary
15. Piston
16. Backup Ring
17. O-ring
18. Backup Ring
19. O-ring
20. Screw, Bleeder
21. Plate, Power
22. Plug, Protective
23. Washer, Plain
24. Hex Head Bolt

Figure 3-20: Brake Assembly

Seal Replacement, Rear Motor (Figure 3-21)

1. Remove all shaft related components from shaft (27), i.e. keys, wire rings, nuts. To aid in reassembly of the motor, make a “v” shaped set of lines from the end cover (24) to the housing using either paint or a marker. With shaft facing down, secure motor in vise by clamping onto housing (15).
2. Loosen and remove seven bolts (26) holding motor assembly together. Remove end cover (24) and body seal (10). Discard seal. Remove balance plate (22) taking care not to drop the four steel balls (23) located in the four holes in the balance plate (22). Remove rotor assembly (21), manifold boot (19), manifold (18), drive link spacer (20) *(Note: Some motors do not use spacer)*, drive link (17) and thrust bearing (13). Remove body seals (9) from rotor assembly (21) and housing seal (8) from housing (15) and discard seals. *(note: compare old housing seal (8) to the two housing seals included in kit to determine which one to use.)*
3. Gently tap shaft (27) upward from housing (15) and remove through rear of housing and lay aside. Remove housing (15) from vise and turn over. Pry dust seal (1) from housing. Push the seal carrier (11), thrust washer (12) and thrust bearing (13) down until they make contact with the roller bearing (14) located in the housing bore.
4. Remove wire ring (2), steel backup shim (3), and high pressure seal (4) from inner bore groove with a small screwdriver *(note: compare old high pressure seal (8) to the two high pressure seals included in kit to determine which one to use.).* Lift out seal carrier (11), thrust washer (12) and thrust bearing (13) from the housing bore. Using a small screwdriver, carefully pry shaft seal (7), teflon backup seal (6) and metal backup shim (5) from seal carrier (11) and discard. Lay seal carrier (11), thrust washer (12) and thrust bearing (13) aside. *(note: if a new thrust washer seal (12) and seal carrier (11) is included in kit, old items may be discarded)*.
5. At this point, all parts should be cleaned in an oil-based solvent and dried using compressed air (for safety, observe all OSHA safety guidelines). All new seals should be lightly coated in clean oil prior to installation.
6. Place shaft (27) on a clean, flat surface with output end facing up. Place thrust bearing (13), then thrust washer (12) on shaft. Lightly coat seal area of shaft with clean oil and place plastic installation sleeve with shaft seal (7) down onto shaft, covering all splines, keyways and wire ring grooves. Slide shaft seal (7) down onto shaft (27) making sure that lip on seal faces down (see Figure 3-21 for correct seal orientation) until it contacts thrust washer (12). Remove plastic installation sleeve. Carefully install the teflon backup seal (6) onto the shaft (27) with the flat side up and the seal lip facing the shaft seal (7). Place the metal backup shim (5) onto the shaft and against the teflon backup seal (6). Place the seal carrier (11) onto the shaft (large end down) and carefully press the seal carrier (11) down onto the seal assembly using an arbor press and sleeve to compress the seals into the carrier.
7. With pilot side facing up, place housing (15) on spacers to raise housing approximately .250 above work surface (note: spacers should allow shaft to contact work surface). Place shaft/seal carrier assembly into housing (15). Install high pressure seal (4) into groove in housing. Install metal backup shim (3) against high pressure seal (4) in groove in housing bore by squeezing the shim (3) between thumb and forefinger to bow shim. While maintaining bow in shim, start the shim into the groove and use a small screwdriver to push the shim into groove. Install wire ring (2) into the groove making sure that the ends are butted.
8. While holding shaft into housing, place housing/shaft assembly in vise with shaft end down. Making sure that end of drive link (17) with crowned splines goes into shaft end, install drive link (17) into shaft and tap lightly to seat the seal carrier assembly against the wire ring (2). Place thrust bearing (13) over drive link (17). If seal carrier (27) is properly seated against wire ring (2), thrust bearing (13) will be flush with rear surface of housing.
9. Install housing seal (8) into groove in housing (15). Place manifold (18) onto housing (15) with side with only seven holes facing housing (15). Install manifold boot (19) over manifold (18) and align bolt holes. Place body seals (9) in grooves in both sides of rotor (21). Place rotor (21) onto manifold (18) with side of rotor with chamfer in splines facing manifold (18).
10. Install balance plate (22) onto rotor (21) making sure side with holes for steel balls (23) faces up. Install four steel balls (23) in holes in balance plate (22). Install end cover seal (10) into groove in end cover (24) and place end cover onto balance plate (22). Install seven assembly bolts (26) and pre-torque to 10 ft.lbs. Using the bolt torque sequence shown in Figure 3-21, final torque all bolts to 50 ft.lbs.
11. Remove motor from vise and place on work surface with shaft (27) facing up. Making sure that lip on seal (1) faces up, place dust seal (1) over shaft (27). Using a sleeve and a hammer, carefully drive dust seal (1) into place.

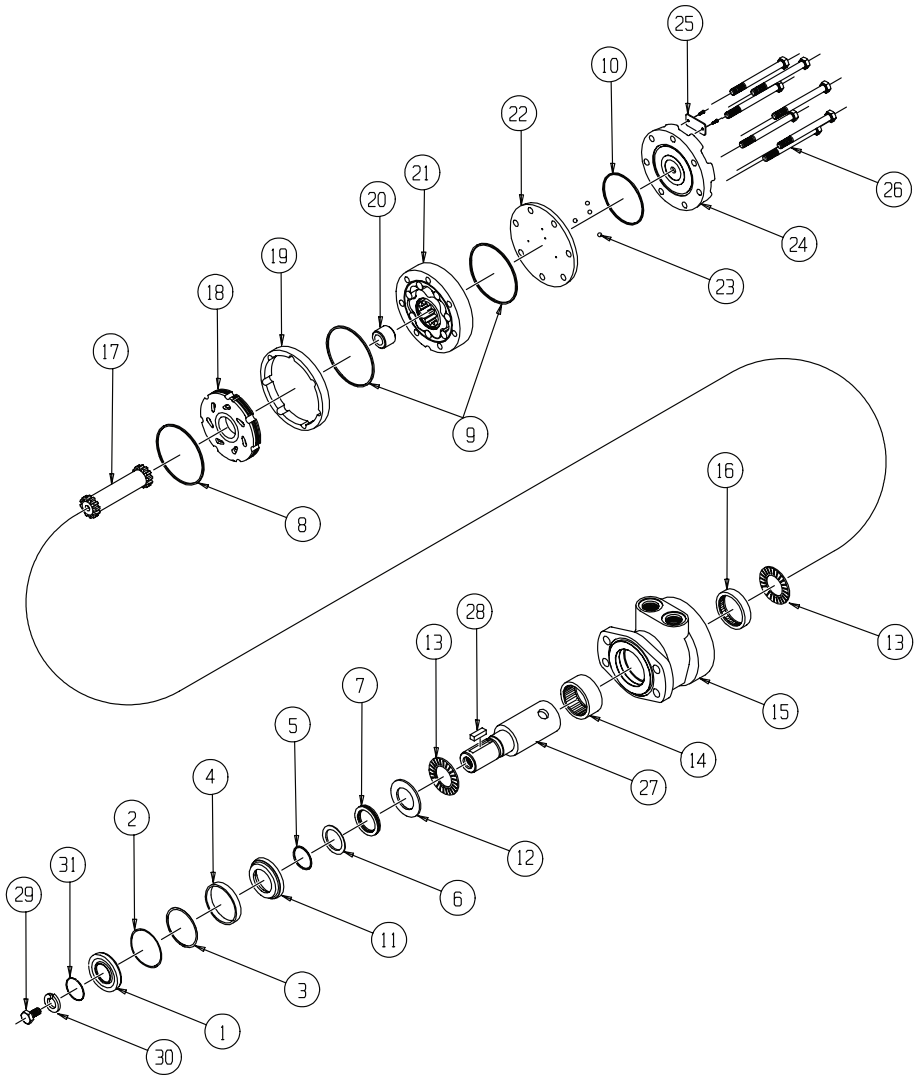

1. Dust Seal
2. Split Wire Ring
3. Metal Backup Shim
4. High Pressure Seal
5. Metal Backup Shim
6. Teflon Backup Seal
7. Shaft Seal
8. Housing Seal
9. Body Seals (2)
10. End Cover Seal
11. Seal Carrier
12. Thrust Washer
13. Thrust Bearing (2)
14. Front Housing Bearing
15. Housing
16. Rear Housing Bearing
17. Drive Link
18. Manifold
19. Manifold Boot
20. Drive Link Spacer
21. Rotor Assembly
22. Balance Plate
23. Steel Balls (4)
24. End Cover
25. I.D. Tag Assembly
26. Assembly Bolts (7)
27. Shaft
28. Shaft Key
29. Shaft Bolt
30. Lock Washer
31. Wire Ring

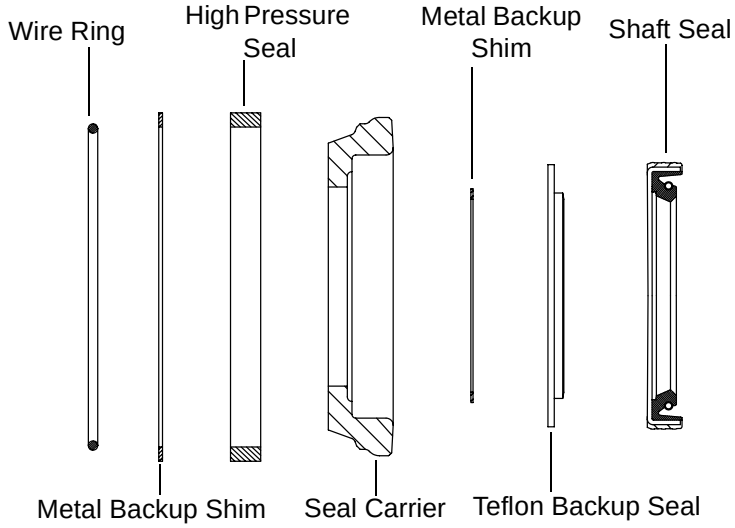

Detail: Shaft Seal Assembly

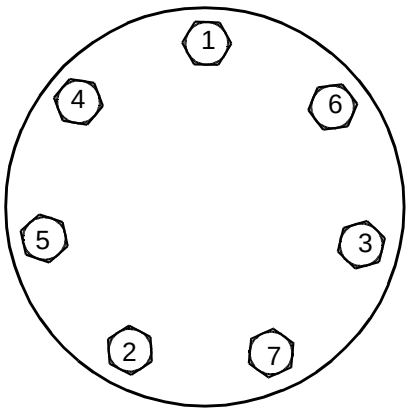

Detail: Bolt Tightening Sequence

Figure 3-21: Rear Drive Motor Assembly

Front Axle 4WD (Figure 3-22)

Removal

1. Park the work platform on firm level ground and block the wheels to prevent the work platform from rolling.
2. Loosen the wheel lug bolts on the motor to be removed.
3. Raise the front of the work platform using a 2-ton jack.
4. Position two 1-ton jack stands under the front axle to prevent the work platform from falling if the jack fails.
5. Remove the wheel nuts and wheel.

CAUTION

ONLY use a wheel puller to remove the hub. Using any other method of removal may damage the drive motor housing and void the warranty.

Clean all fittings before disconnecting the hose assemblies.

Plug all port holes and hose assemblies IMMEDIATELY to prevent contamination from dust and debris.

6. Tag and disconnect the hose assemblies.
7. Remove the screw and nut from the end of the steering link. Swing the connecting link clear of the steering link.
8. Remove the “E” ring from the steering link pin.
9. Lift the connecting link off of the steering link pin.
10. Swing the trunnion assembly around to gain access to the inside.
11. Remove the four nuts from inside the trunnion and remove the drive motor/hub assembly.

Installation

1. Position the drive motor/hub assembly into the steering trunnion and secure with the four nuts, tighten.
2. Install the connecting link onto the steering link pin and secure with the “E” ring.
3. Swing the connecting link toward the steering link, and align the holes. Install the screw and nut, tighten.
4. Install the hose assemblies.
5. Install the wheel and wheel nuts onto the hub. Torque the wheel nuts to 150 ft. lbs. [203 Nm].
6. Remove the jack stands used to block the wheels. Lower the jack and remove.
7. Operate the drive system to check for leaks.

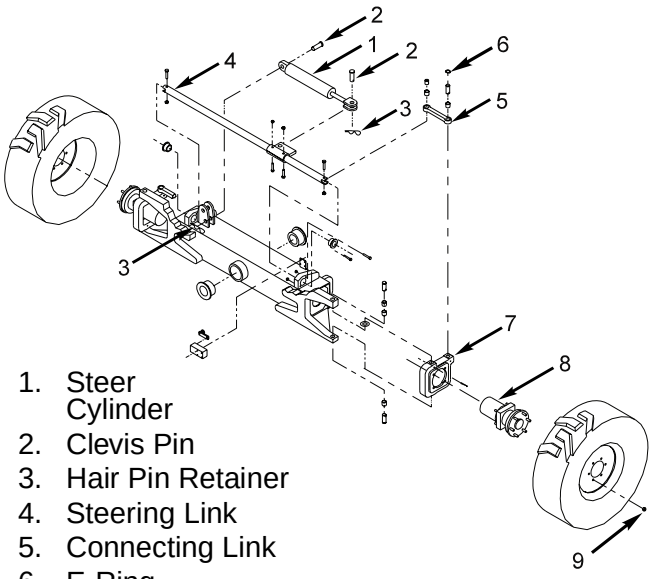

1. Steer Cylinder
2. Clevis Pin
3. Hair Pin Retainer
4. Steering Link
5. Connecting Link
6. E-Ring
7. Trunnion
8. Drive Motor
9. Wheel Nut

Figure 3-22: Front Axle Assembly, 4WD

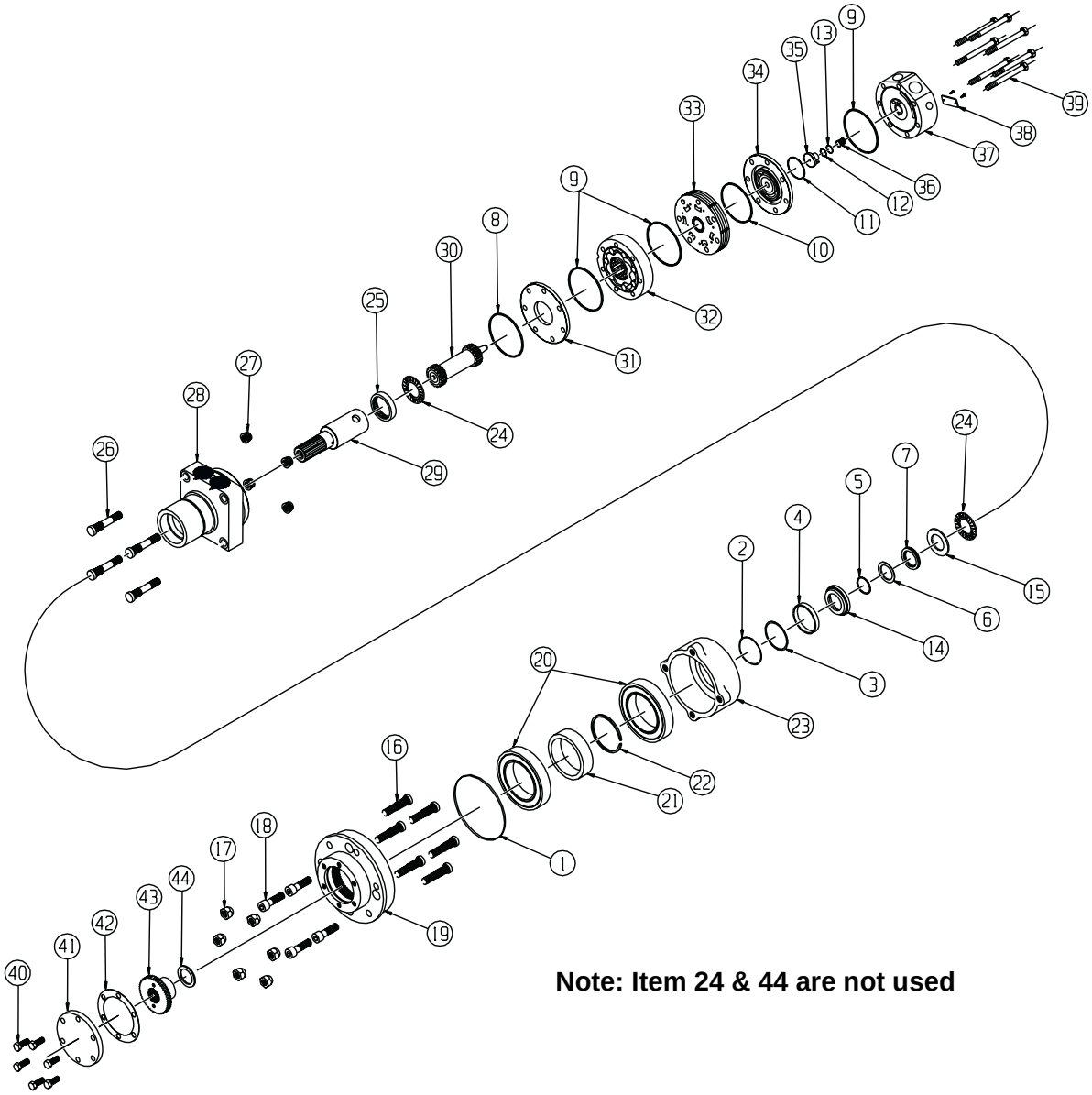

1. Flange Seal
2. Wire Ring
3. Metal Backup Shim
4. High Pressure Seal
5. Metal Backup Shim
6. Teflon Backup Seal
7. Shaft Seal
8. Housing Seal
9. Body Seals (3)
10. Manifold Seal
11. Commutator Seal
12. O-Ring Seal
13. Teflon Backup Seal
14. Seal Carrier
15. Thrust Washer
16. Studs (6)
17. Lug nuts (6)
18. Capscrews (4)
19. Wheel Flange
20. 125mm Bearings (2)
21. Bearing Spacer
22. Thrust Washer
23. Bearing Hub
24. Thrust Bearings
25. Rear Housing Bearings
26. Planetary Mount Studs (4)
27. Mounting Nuts (4)
28. Housing
29. Shaft
30. Drive Link
31. Divider Plate
32. Rotor Assembly
33. Manifold
34. Commutator Assembly
35. End Cover Piston
36. Piston Spring
37. End Cover
38. I.D. Tag Assembly
39. Assembly Bolts (7)
40. Drive Cover Screws (6)
41. Drive Cover
42. Paper Gasket
43. Driver

Figure 3-23: Front Drive Motor Assembly

Seal Replacement, Front Motor (Figure 3-23 & Figure 3-24)

1. Remove six bolts (40) from end cap (41). Lift end cap (41) off of wheel flange (19). Peel or scrape paper gasket (42) off of end cap and/or wheel flange (19). If grease is between end cap (41) and driver (43), remove grease. Screw a 1/4-20 bolt (not included) into one of the two threaded holes in the driver (43) and lift the driver out of the wheel flange (19). If grease is between driver (43) and housing pilot (28), remove grease.
2. To aid in reassembly of the motor, make a "v" shaped set of lines from the end cover (37) to the housing (28) using either paint or a marker. With hub facing down, secure motor in vise by clamping on to housing (28). Loosen and remove seven bolts (39) holding motor assembly together. Remove end cover (37) carefully as piston (35) and spring (36) may fall out. If piston does not come out, carefully pry piston (35) out of end cover (37) and lay aside. Remove o-ring seal (12) and teflon backup seal (13) from end cover and discard seals. Remove spring (36) and lay aside.
3. Lift commutator container and commutator (34) from motor and lay aside. Place commutator on a flat, clean surface with the seal (11) facing up. Place the tip of a small screwdriver on the seal (11) and gently tap until opposite side of seal lifts from groove. Remove seal and discard.
4. Remove manifold (33), rotor set (32) and divider plate (31) from motor. Remove all seals (8, 9, & 10) from components and discard. (caution- do not allow rolls to drop from rotor assembly (32) when removing rotor assembly from motor.) Remove drive link (30) from motor and lay aside.
5. Remove motor from vise and re-clamp in vise with pilot side of housing facing up. Using a brass hammer, carefully tap shaft (29) down until rear shaft bearing (25) is protruding from rear housing surface approximately 5/8". Using a small screwdriver, remove wire ring (2), metal backup shim (3) and high pressure seal (4) from inner bore groove. Remove shaft/seal carrier assembly (29, 14, 5-7) up through housing. Remove seal carrier (14), thrust washer (15) and thrust bearing (24) from shaft and lay aside.
6. Using a small, flat bladed screwdriver, carefully pry shaft seal (7), teflon backup seal (6) and metal backup shim (5) from seal carrier (14) and lay aside. Lay seal carrier (14), thrust washer (15) and thrust bearing (24) aside.
7. At this point, all parts should be cleaned in an oil-based solvent and dried using compressed air (for safety, observe all OSHA safety guidelines). All new seals should be lightly coated in clean oil prior to installation.
8. (note: shaft seals for 1-1/4" and 1-1/2" shafts are included in this kit. To determine which new seal to use for servicing, refer to old shaft seal). Place shaft on a clean surface with output end facing up. Install thrust bearing (24) and then thrust washer (15) onto shaft. After coating shaft seal (7) and teflon backup seal (6) with clean oil, install shaft seal (7) onto shaft with lip facing. Install teflon backup seal (6) with lip facing down followed by metal backup shim (5) (See Figure 3-24 for correct seal position). Install seal carrier (14) onto shaft with large end facing down. Using a sleeve and press, gently press seal carrier (14) down to compress seal assembly (5-7) into seal carrier (14).
9. Place housing (28) in vise with pilot of housing facing up. Place spacer under housing (28) to prevent shaft (29) from dropping to work surface. Spacer should allow shaft to be about 1/2" below rear surface of housing.
10. Place shaft/shaft seal assembly into housing (28) with output end facing up. Install high pressure seal (4) into groove in inner bore of housing (28). Install metal backup shim (3) against high pressure seal (4) by squeezing the shim (3) between thumb and forefinger to bow shim. While maintaining bow in shim, start the shim into the groove and use a small screwdriver to push the shim into groove. Install wire ring (2) into groove making sure that the ends are butted.
11. While holding shaft into housing, secure housing/shaft assembly in vise with shaft end down. Gently tap shaft bearing (25) down into housing until bearing is approximately 1/16" below rear housing surface. Install drive link (30) into shaft and gently tap drive link (30) down to seat seal carrier (14) against wire ring (2). If shaft (29) is seated properly against wire ring (2), rear surface of shaft (29) should be flush with rear surface of housing (28).
12. Install housing seal (8) into groove in housing (28). Place divider plate (31) onto housing (28) aligning bolt holes. Place body seals (9) in grooves in both sides of rotor (32). Place rotor (32) onto divider plate (31) with side of rotor with chamfer in splines facing divider plate (31). Place manifold (33) onto rotor (32) with seal groove side up. Install manifold seal (10).
13. Install the commutator seal (11) into the commutator (34) with the metal side facing up. Use finger pressure to press the seal down flush with the surface of the commutator. Place the commutator container onto the manifold (33) and then place the commutator onto the protruding end of the drive link (30) making sure that the seal side faces up.

14. Install the remaining body seal (9) in the groove in the face of the end cover (37). Install piston spring (36) into end cover (37), then the white teflon backup seal (13) followed by the o-ring seal (12). Lining up the alignment pin with the hole in the end cover, press piston (35) into the end cover (37). While holding the piston (35) in the end cover (37), lower the end cover assembly onto the motor. Check to make sure that the end cover ports are in their original position.
15. Install the seven assembly bolts (39) and pre-torque to 10 ft. Lbs. Using bolt torque sequence shown in Figure 3-24, final torque all bolts to 50 ft. Lbs.
16. Place spacer (44) over shaft (29). Place driver (43) over shaft (29) while rotating wheel flange (19) slightly to allow splines to mate. Place paper gasket (42) onto wheel flange (19). Reapply grease between driver (43) and end cap (41) (only if end cap (41) does not have grease fitting). Place end cap (41) onto wheel flange (19). Install six bolts (40) and torque to 150 ft. Lbs. Using the bolt torque sequence shown if figure 3. If end cap (41) has grease fitting, apply grease.

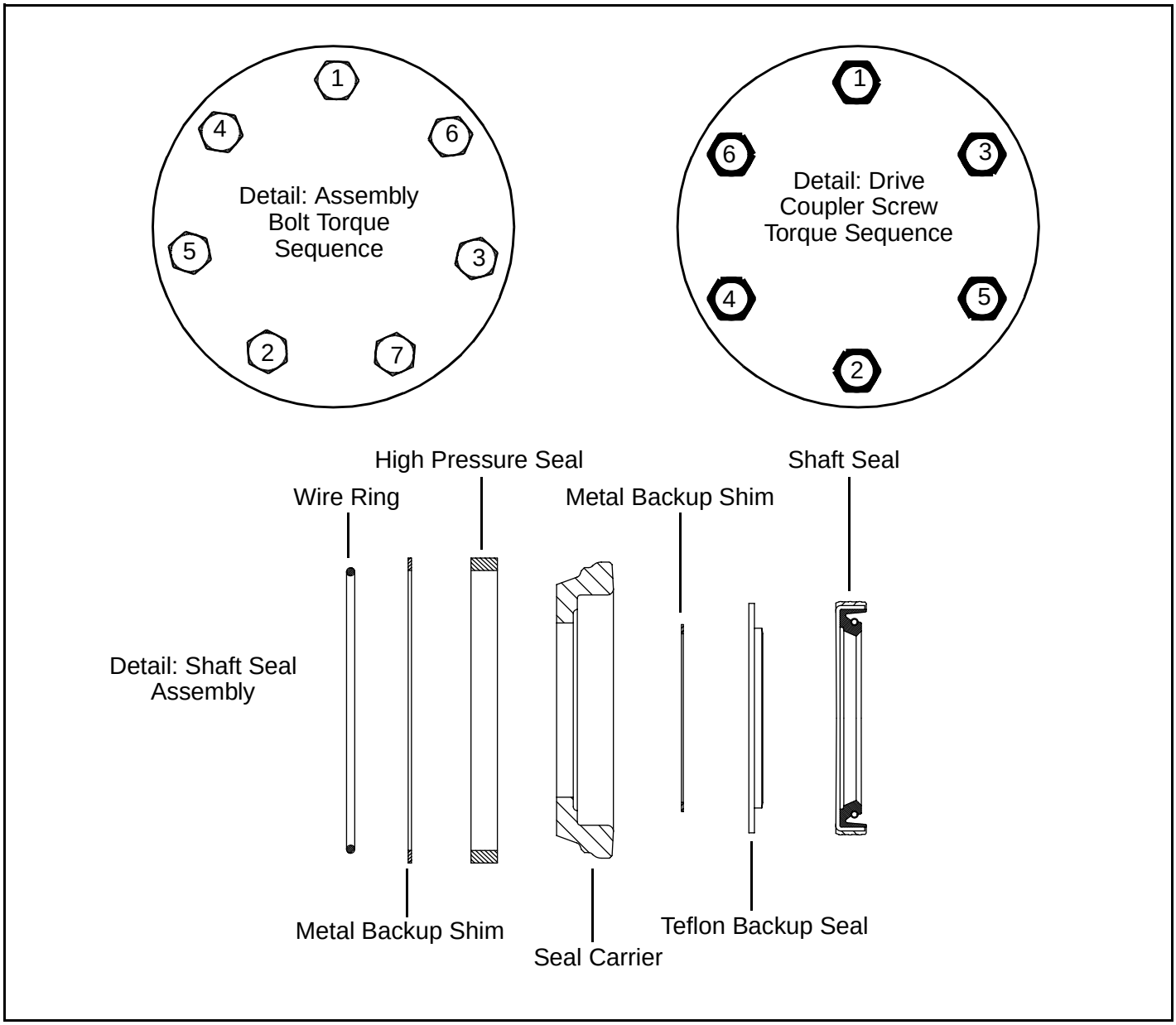

Figure 3-24: Front Drive Motor Assembly, Details

3.13 AXLE CYLINDER (4WD ONLY)

Removal (Figure 3-25)

Note: Be sure platform is fully down and that machine is on level ground.

1. Lift the chassis with a 2 ton jack, and place 1 ton jackstands underneath the left and right frame members just behind the articulating axle assembly. Lower the jack. The weight of the front of the chassis should *now* be supported by the jackstands, and the front wheels should *still* be allowed to touch the ground.
2. Remove the four screws from the front axle cover, remove cover.
3. Remove and cap the hoses.
4. Remove the hex nuts from the cylinder pins at both ends, remove pins.
5. Remove the cylinder from of the chassis.

Seal Replacement (Figure 3-22)

Note: Provide a clean work area for this operation, and observe clean assembly practices. Seals and hydraulic cylinder components are highly sensitive to contamination that may not even be visible to the naked eye.

1. Use a spanner wrench to unscrew the head from the cylinder body tube.
2. Carefully slide the rod, piston, and head out of the body tube and place on a clean surface.
3. Remove cotter pin from cylinder rod.
4. Unscrew the slotted nut from the rod end.
5. Remove the piston from the rod.
6. Slide the rod out of the head.
7. Remove all of the old seals and wear rings, discard.
8. Thoroughly clean all parts with solvent. Rinse the inside of the tube and allow to drain. A high pressure rinse and wipe with a lint free rag is preferable.
9. Inspect the rod, head, piston, and tube for scratches, pits, or polishing. Check seal groves and sealing surfaces. Scratches or pits deep enough to catch the fingernail are unacceptable, replace the affected component. Polishing is a sign of uneven loading, when this occurs, the surface should be checked for roundness. Surfaces not round within .007” should be replaced.
10. Lubricate all components and seals with clean hydraulic oil prior to assembly.

Note: During seal replacement steps, do not use sharp edged tools to avoid cutting the seals. After assembling all seals, allow at least one hour for the seals to elastically restore to their original shape before assembly. Refer to Figure 3-21 for component identification and placement.

11. Separate the three components of the piston seal. Stretch the rubber inner ring over the piston and into the seal groove. Warm the teflon outer ring to 150°f using heated hydraulic fluid or water. Stretch the teflon outer ring into the seal groove. Clean the groove in the teflon ring and install the quad ring. Verify that none of the rings have twisted.
12. Install the glass filled nylon wear rings into the outer grooves in the piston.
13. Twist the U-Cup seal into a ‘C’ shape and allow it to snap into the groove in the head.
14. Use the above technique to install the wiper into the head.
15. Install the static o-ring and the static backup ring into the grove in the head. Verify that the backup ring is closest to the threads.
16. Install the sealing o-ring between the threads and the flange lip on the head, be careful not to damage the o-ring on the threads.
17. Slide the head assembly onto the rod.
18. Install the static o-ring into the groove on the rod.
19. Install the piston onto the rod.
20. Install the slotted nut and torque to 325 to 520 ft.-lbs. Install the cotter pin. Do not back off on the slotted nut to install the cotter pin. Once the torque has reached 325 ft.-lbs., increase until the next slot aligns with the hole in the rod.
21. Slide the piston, rod, and head into the tube. Be careful not to damage the piston seal on the threads during assembly. If necessary, use shim stock to protect the piston seal when inserting.
22. Use a spanner wrench to tighten the head.

Installation

1. Remove the pilot operated check valves and completely fill both ends of cylinder with hydraulic oil. Replace the pilot operated check valves.
2. Attach both ends of the cylinder to the upper and lower attachments with cylinder pins.
3. Install the hex nuts onto the cylinder pins, tighten.
4. Remove the jackstands from under the chassis.
5. Operate the work platform over rough terrain and check for proper function and leaks.

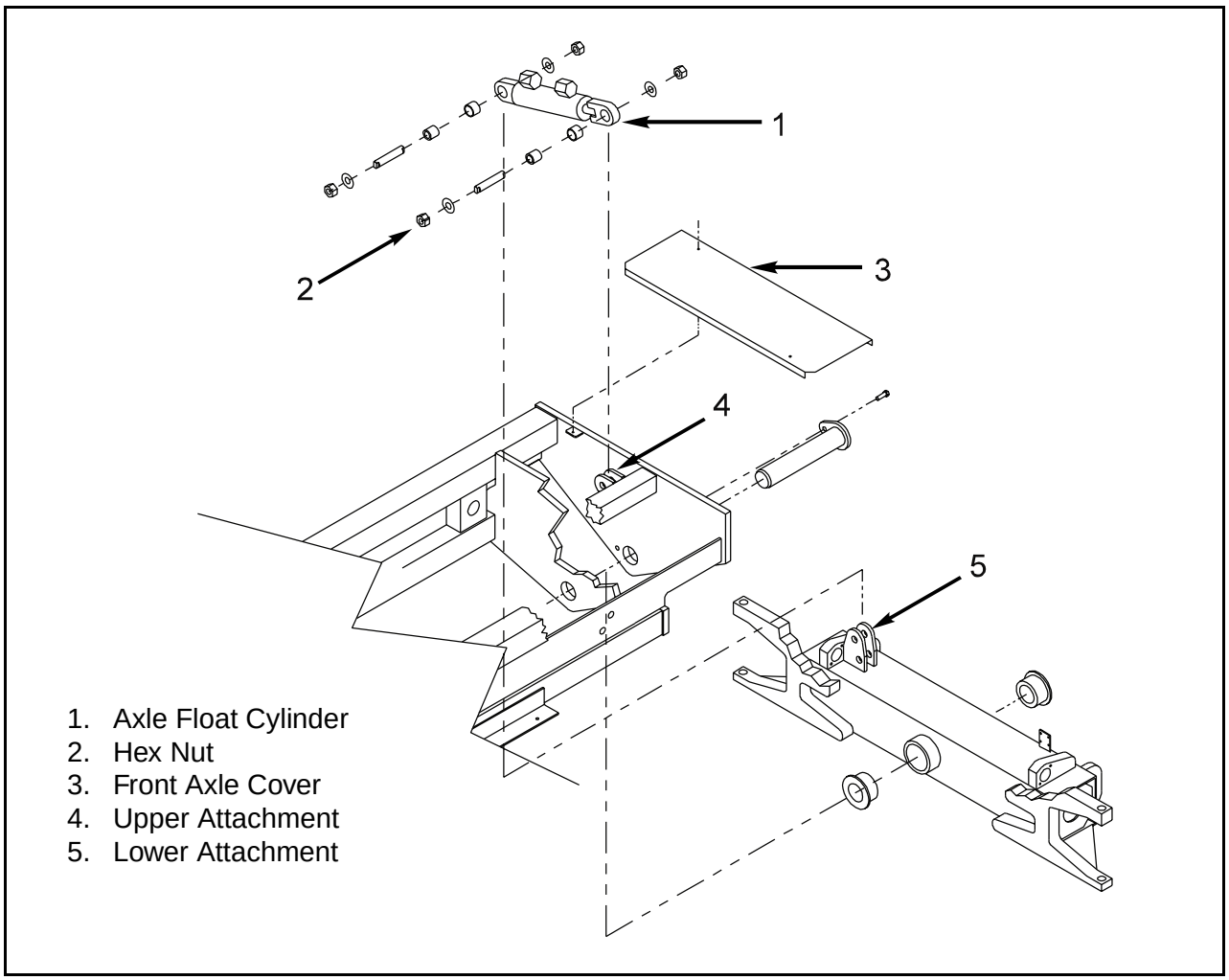

Figure 3-25: Floating Axle Assembly

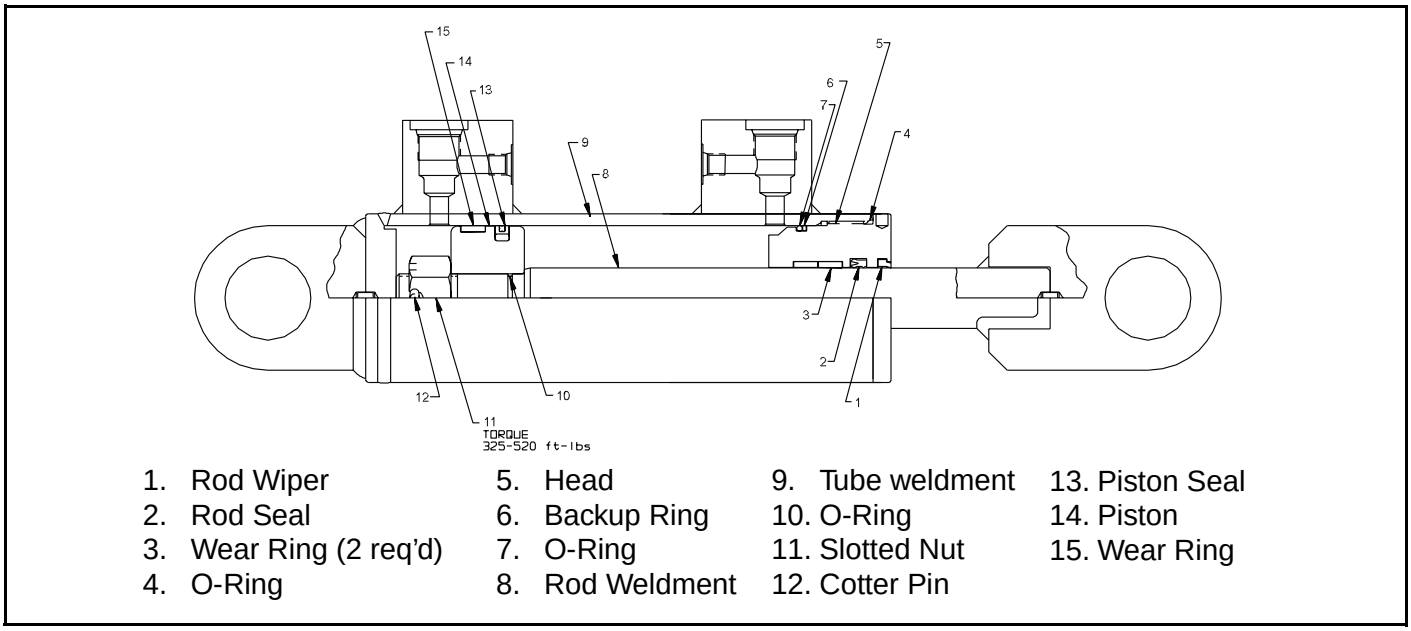

Figure 3-26: Axle Float Cylinder Cross Section

3.14 STEERING CYLINDER

Removal (Figure 3-27)

1. Remove the two capscrews holding the front axle cover in place (4WD only).
2. Remove and cap the hoses. Mark them for reference.
3. Remove the hair pin retainers from the clevis pins at each end of the cylinder.
4. Remove the clevis pins.
5. Remove the cylinder from the chassis.

Seal Replacement (Figure 3-28)

Note: Provide a clean work area for this operation, and observe clean assembly practices. Seals and hydraulic cylinder components are highly sensitive to contamination that may not even be visible to the naked eye.

1. Use a spanner wrench to rotate the head until the retaining ring becomes visible in the grove milled into the side of the cylinder. Insert a screwdriver under the beveled edge of the retaining ring to start it through the opening. Continue to rotate the head until the retaining ring works it's way out of the opening.
2. Remove the rod, head, and piston from the tube.
3. Unscrew the locknut from the end of the rod.
4. Remove the piston from the rod.
5. Slide the rod out of the head.
6. Remove all of the old seals and wear rings, discard.
7. Thoroughly clean all parts with solvent. Rinse the inside of the tube and allow to drain. A high pressure rinse and wipe with a lint free rag is preferable.
8. Inspect the rod, head, piston, and tube for scratches, pits, or polishing. Check seal groves and sealing surfaces. Scratches or pits deep enough to catch the fingernail are unacceptable, replace the affected component. Polishing is a sign of uneven loading, when this occurs, the surface should be checked for roundness. Surfaces not round within .007" should be replaced.
9. Lubricate all components and seals with clean hydraulic oil prior to assembly.

Note: During seal replacement steps, do not use sharp edged tools to avoid cutting the seals. After assembling all seals, allow at least one hour for the seals to elastically restore to their original shape before assembly. Refer to Figure 3-26 for component identification and placement.

10. Stretch the o-ring loader into the seal grove on the piston. Verify that it has not been twisted or pinched. Start one edge of the bidirectional piston seal into the grove in the piston and work it around into the grove with your thumbs. Be very careful not to cut the outer diameter of this seal.
11. Install the wear ring into the grove on the piston.
12. Twist the u-cup seal into a 'C' shape and snap it into the grove inside of the head. Note that the 'U' groove in the seal should face the inside of the cylinder.
13. Use the above technique to install the wiper into the groove inside the head. Note that the blade of the wiper should face toward the outside of the cylinder.
14. Install the static backup ring into the groove closest to the inside edge of the head.
15. Install the static o-ring into the above groove, making sure that it falls inside of the static backup ring.
16. Slide the head onto the rod.
17. Install the static o-ring onto the end of the rod.
18. Install the piston onto the rod.
19. Install the locknut onto the rod, torque to 250 ft.-lbs.
20. Slide the piston, rod, and head into the tube. Be careful not to damage any of the seals during assembly. If necessary, use shimstock to prevent the seals from extruding into the retaining ring slot.
21. Using a spanner wrench, rotate the head until the retaining ring hole is visible in the groove milled into the side of the cylinder. Insert the retaining ring hook into the hole and rotate the head 1-1/4 turns until the retaining ring is drawn completely into the tube and the ends are covered.

Installation

1. Align the ends of the cylinder with the mounts on the chassis.
2. Install the clevis pins.
3. Install the hair pin retainers into the clevis pins at each end of the cylinder.
4. Install the hoses, noting their orientation markings from disassembly.
5. Install the front axle cover and the two capscrews holding it in place, tighten (4WD only).

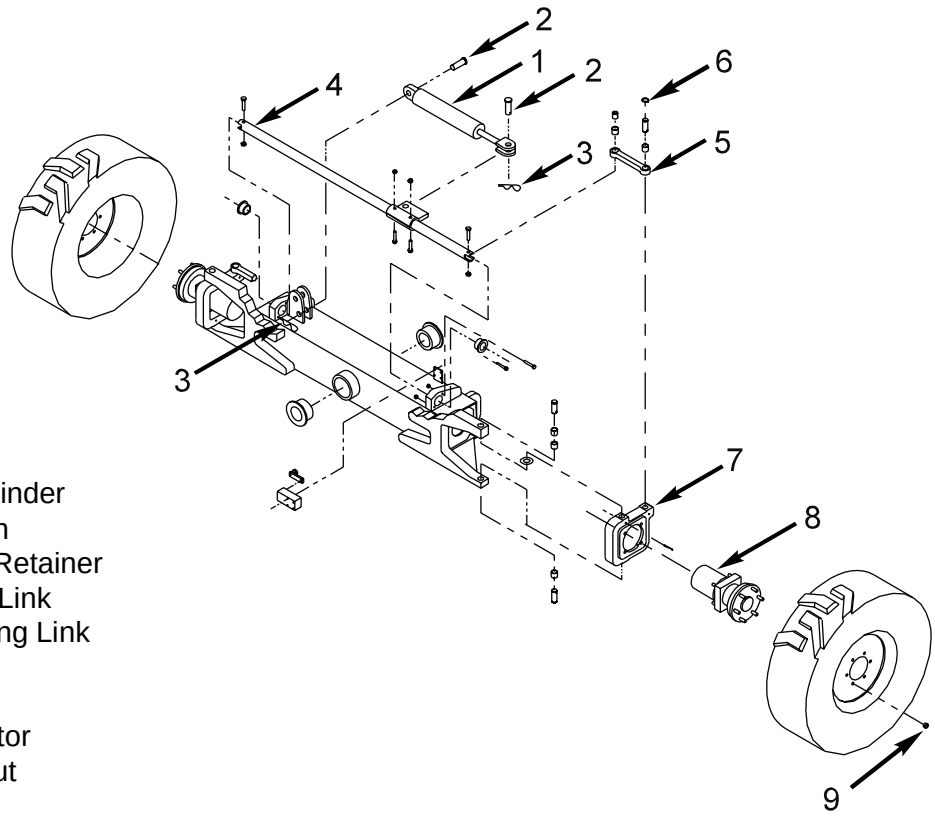

1. Steer Cylinder
2. Clevis Pin
3. Hair Pin Retainer
4. Steering Link
5. Connecting Link
6. E-Ring
7. Trunnion
8. Drive Motor
9. Wheel Nut

Figure 3-27: Front Axle Assembly, 4WD

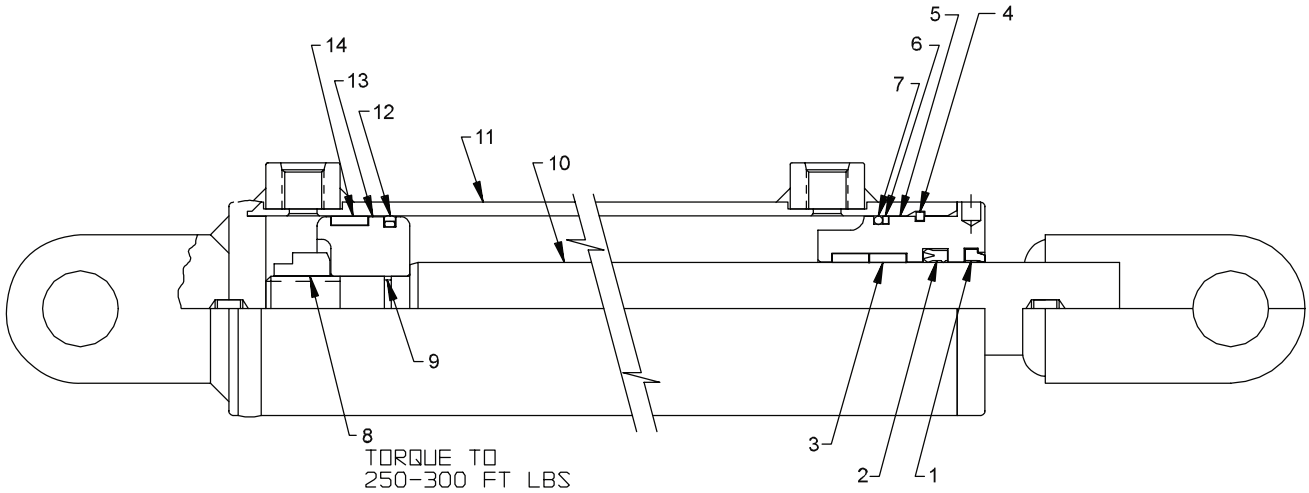

1. Rod Wiper
2. Rod Seal
3. Wear Ring (2 req'd)
4. Retaining Ring
5. Head
6. Backup Ring
7. O-ring
8. Locknut
9. O-Ring
10. Rod Weldment
11. Tube Weldment
12. Piston Seal
13. Piston
14. Wear Ring

Figure 3-28: Steering Cylinder Cross Section

3.15 LIFT CYLINDERS

Removal (Figure 3-29)

1. Raise and block the elevating assembly (See Figure 3-6).
2. Open emergency lowering valve to be sure all pressure is out of the lift cylinder.
3. Remove and cap both hoses and fittings.
4. Remove the down valve and cable assembly.
5. Support the lift cylinder with a suitable lifting device to prevent falling.
6. Remove the retaining bolts from the upper and lower pivot pins.
7. Drive out the pivot pins, upper one first, then the lower one.
8. Hoist the cylinder out of the elevating assembly from the front. **DO NOT sling the cylinder by the rod end pivot, this will cause the cylinder to extend when hoisted.**

Seal Replacement (Figure 3-29)

Note: Provide a clean work area for this operation, and observe clean assembly practices. Seals and hydraulic cylinder components are highly sensitive to contamination that may not even be visible to the naked eye.

1. Use a spanner wrench to unscrew the head from the cylinder body tube.
2. Carefully slide the rod, piston, and head out of the body tube and place on a clean surface.
3. Unscrew the locknut from the rod end.
4. Remove the piston from the rod.
5. Slide the head off of the rod.
6. Remove all of the old seals and wear rings, discard. Do not remove the cast iron ring from the piston.
7. Thoroughly clean all parts with solvent. Rinse the inside of the tube and allow to drain. A high pressure rinse and wipe with a lint free rag is preferable.
8. Inspect the rod, head, piston, and tube for scratches, pits, or polishing. Check seal groves and sealing surfaces. Scratches or pits deep enough to catch the fingernail are unacceptable, replace the affected component. Polishing is a sign of uneven loading, when this occurs, the surface should be checked for roundness. Surfaces not round within .007” should be replaced.
9. Inspect and clean the cushion orifice if any debris is present.
10. Lubricate all components and seals with clean hydraulic oil prior to assembly.

Note: During seal replacement steps, do not use sharp edged tools to avoid cutting the seals. After assembling all seals, allow at least one hour for the seals to elastically restore to their original shape before assembly. Refer to Figure 3-29 for component identification and placement.

11. Separate the three components of the piston seal. Stretch the rubber inner ring over the piston and into the seal groove. Warm the teflon outer ring to 150°f using heated hydraulic fluid or water. Stretch the teflon outer ring into the seal groove. Clean the groove in the teflon ring and install the quad ring. Verify that none of the rings have twisted.
12. Install the glass filled nylon wear rings into the outer grooves in the piston.
13. Twist the u-cup seal into a ‘C’ shape and allow it to snap into the groove in the head.
14. Use the above technique to install the wiper into the head.
15. Install the static o-ring and the static backup ring into the grove in the head. Verify that the backup ring is closest to the threads.
16. Install the sealing o-ring between the threads and the flange lip on the head, be careful not to damage the o-ring on the threads.
17. Slide the head assembly onto the rod.
18. Install the static o-ring into the groove on the rod.
19. Install the piston onto the rod.
20. Install the locknut and torque to 1125 ft.-lbs.
21. Slide the piston, rod, and head into the tube. Be careful not to damage the piston seal on the threads during assembly. If necessary, use shimstock to protect the piston seal when inserting.
22. Use a spanner wrench to tighten the head.

Installation

Note: Before installing the cylinder, check the pins and bearings for excessive wear. Replace if necessary.

1. Using a suitable lifting device, lower the cylinder into the elevating assembly from the front. **DO NOT sling the cylinder by the rod end pivot, this will cause the cylinder to extend when hoisted.**
2. Align the pivots and install the pivot pins, lower one first, then the upper one.
3. Install the retaining bolts into the pivot pins.
4. Install the down valve and cable assembly. Adjust the cable to stop on the collar of the cable jacket, before the down valve reaches the full extent of it's pull. The down valve may leak if the cable is allowed to pull the spool of the valve beyond it's limit.
5. Install the hoses.
6. Lift and lower the machine for several cycles to work out the air. Check for leaks, repair as necessary.

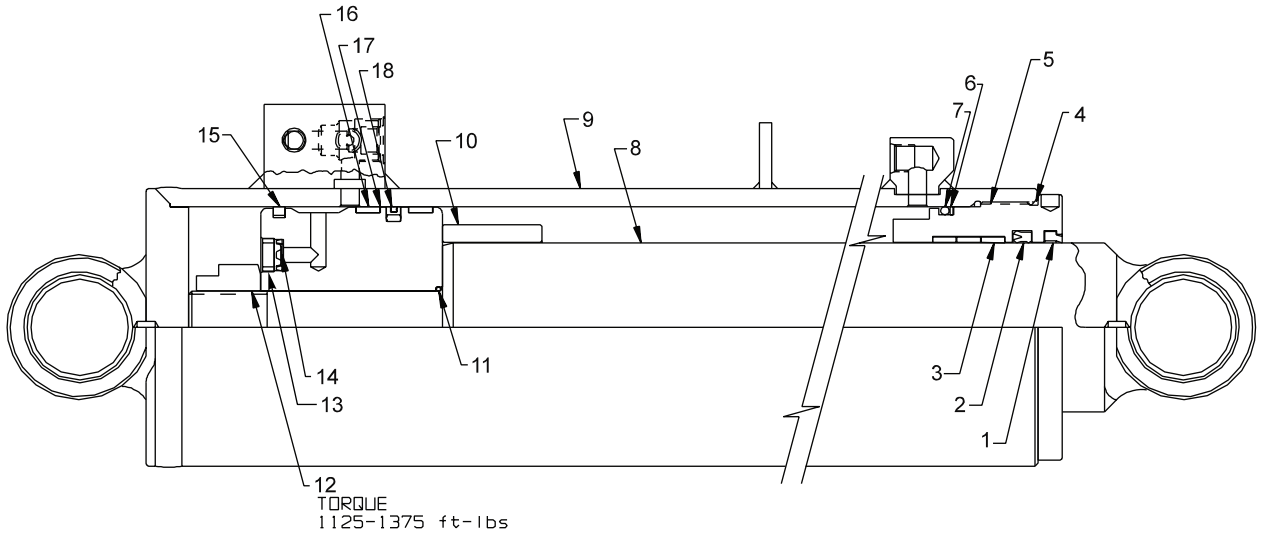

1. Rod Wiper
2. Rod Seal
3. Wear Ring (3 req'd)
4. O-Ring
5. Head
6. Backup Ring
7. O-Ring
8. Rod Weldment
9. Tube Weldment
10. Spacer
11. O-Ring
12. Locknut
13. Bushing
14. Orifice
15. Cast Iron Ring
16. Wear Ring (2 req'd)
17. Piston
18. Piston Seal

Figure 3-29: Lift Cylinder Cross Section

3.16 OUTRIGGER CYLINDER

Removal (Figure 3-30)

1. Remove the plug from the top of the outrigger cylinder.
2. Disconnect the wires from the pressure switch and the ball switch. Tag them for identification during reassembly.
3. Unscrew the strain relief and pull the wires out of the top of the cylinder.
4. Remove and cap the hoses. Tag them for identification during reassembly.
5. Remove the four capscrews, nuts, and washers holding the outrigger cylinder to the outrigger support weldment.
6. Remove the outrigger cylinder.

Seal Replacement (Figure 3-31)

Note: Provide a clean work area for this operation, and observe clean assembly practices. Seals and hydraulic cylinder components are highly sensitive to contamination that may not even be visible to the naked eye.

1. Clamp barrel assembly into vise, using aluminum sleeve to protect barrel from excessive scratches. Remove counterbalance valve from barrel assembly, use extreme caution valve is under pressure.
2. Unthread mount plate bolt from barrel assembly using a spanner wench, a sharp impact on wrench is needed to loosen loctite from threads. Remove mount plate from end of rod.
3. Unthread retaining nut and remove from barrel assembly, using a spanner wrench.
4. Gently remove rod assembly from inside barrel assembly using extreme caution not to damage chrome plating on rod.
5. Remove seal retainer from rod assembly. Remove & discard all seals from seal retainer (rod wiper, rod seal, and static seal #1).
6. Clamp rod assembly in vise, using aluminum sleeve to protect chrome plating from damage. Drill out stakes on piston nut apply heat to threads on rod and piston, to loosen loctite on threads. Remove piston from rod assembly using spanner wrench.
7. Remove piston from rod, remove piston seal and discard.
8. Clean all components with cleaning solvent. Clean all Locktite from foot pad bolt.
9. Apply a light coating of hydraulic oil to all seals and sealing components prior to assembly.

   Note: During seal replacement steps, do not use sharp edged tools to avoid cutting the seals. After assembling all seals, allow at least one hour for the seals to elastically restore to their original shape before assembly. Refer to Figure 3-31 for component identification and placement.

10. Install rod wiper by folding into a ‘C’ shape and allowing it to “snap” into the outer seal groove in the seal retainer.
11. Install rod seal into inner seal groove in seal retainer using above method.
12. Stretch static seal #1 into outer seal groove on seal retainer.
13. Stretch piston seal into seal groove on piston.
14. Install seal retainer onto rod assembly, from piston end of rod, using a sharp blow to seal retainer, with hard rubber mallet, to overcome seal squeeze.
15. Apply Loctite #262 (or equivalent) to rod end threads. Install piston onto rod end, torque using spanner wrench until tight.
16. Install rod assembly into barrel assembly, using extreme caution not to damage chrome plating on rod.
17. Seat seal retainer into barrel using a sharp blow with a hard rubber mallet to overcome seal squeeze.
18. Thread retaining nut onto barrel assembly, using spanner wrench, tighten.
19. Apply Loctite #242 (or equivalent) to threads of foot pad bolt.
20. While holding foot pad in place at end of rod, install foot pad bolt using spanner wrench, tighten.

Installation

1. Install the outrigger cylinder to the outrigger support weldment using the four capscrews, nuts, and washers; tighten.
2. Install the hoses exactly as disassembled.
3. Thread the wires for the pressure switch and the ball switch through the strain relief.
4. Reattach the wires to the switches exactly as disassembled.
5. Tighten strain relief.
6. Install plug to top of outrigger cylinder.

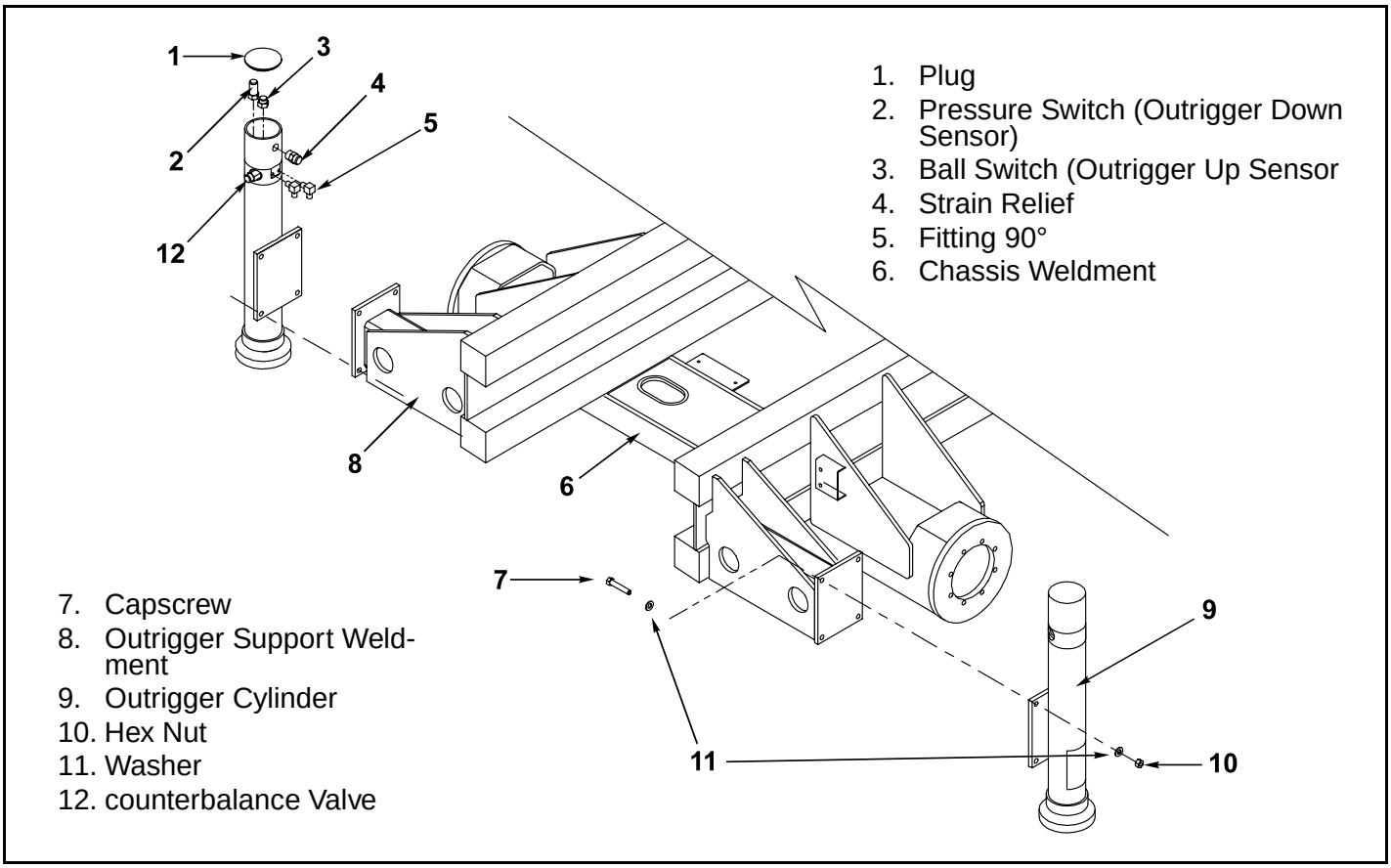

Figure 3-30: Outrigger Cylinder Installation

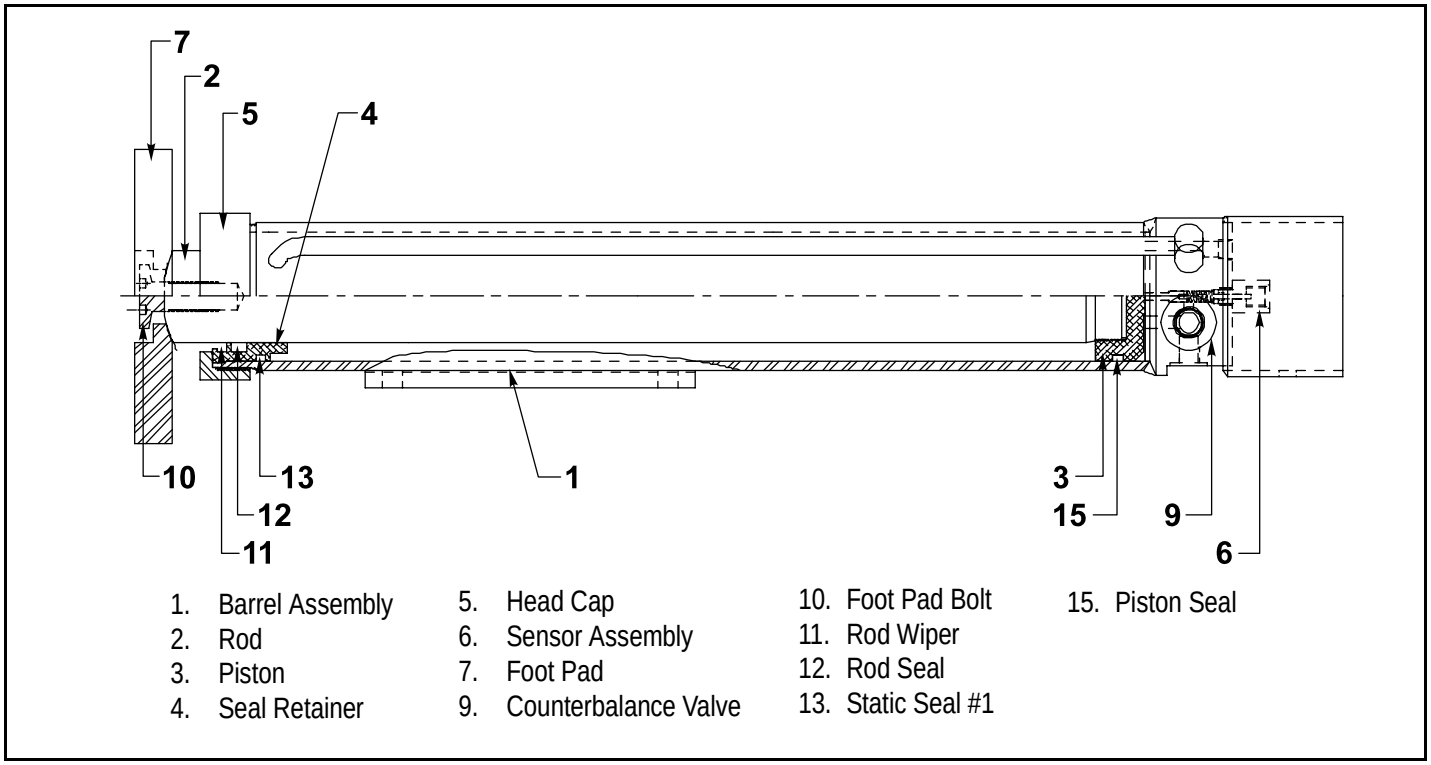

Figure 3-31: Outrigger Cylinder Cross Section

3.17 Engine Adjustments

Use the following procedures to set engine speeds for gasoline, propane, and diesel engines. For complete service information on Kubota engines, consult the Kubota Work Shop Manual for your engine.

Dual Fuel Engine

Engine comes pre-adjusted from factory and should not need to be adjusted.

Gasoline Engine

Idle Speed (Figure 3-32)

1. Warm up the engine for 20 minutes and shut off.
2. Tighten the pilot screw of the carburetor completely, then loosen 1 to 1 1/2 turns. Do not overtighten the pilot screw.
3. Start the engine. Release the throttle switch if it is engaged.
4. Back off on the throttle stop screw until the engine is barely running.
5. Adjust the pilot screw to achieve maximum RPM.
6. Adjust throttle stop screw until engine RPM reaches 1350 ±50.

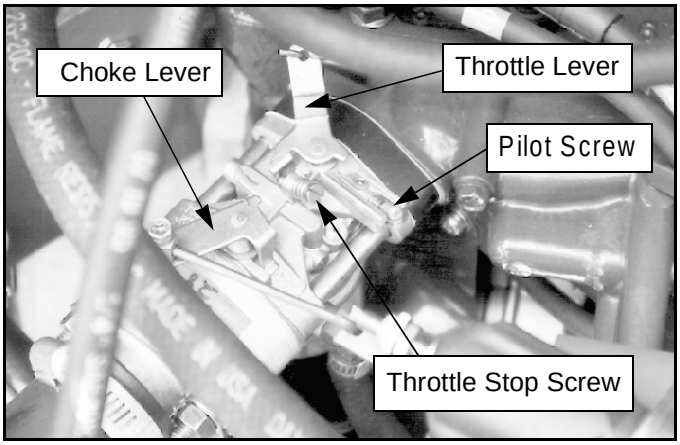

Figure 3-32: Gasoline Engine Carburetor

Governed High Speed

1. Loosen the locknut on the governor lever.
2. While pushing the throttle fully open with the governor lever, turn the governor shaft fully clockwise with a screwdriver.
3. Tighten the locknut in this position
4. Start the engine and depress the throttle button.
5. Adjust the high speed adjustment screw until the RPM reaches 3400 ± 50.

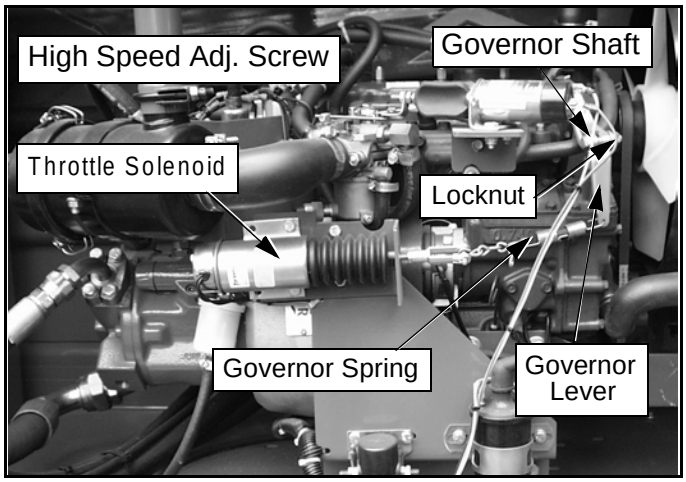

Figure 3-33: Gasoline Engine Governor

Diesel Engine

Idle Speed (Figure 3-34)

1. Warm up the engine for 20 minutes.
2. Depress the throttle button to put the engine in high speed.
3. Adjust the idle stop screw until the RPM reaches 1350 ± 50.
4. Apply one drop of sealant to protect the adjustment from adjustment.

High Speed (Figure 3-34)

1. Warm up the engine for 20 minutes.
2. Depress the throttle button to put the engine in high speed.
3. Adjust the high speed screw until the RPM reaches 3000 ± 50.
4. Apply one drop of sealant to protect the adjustment from vibration.

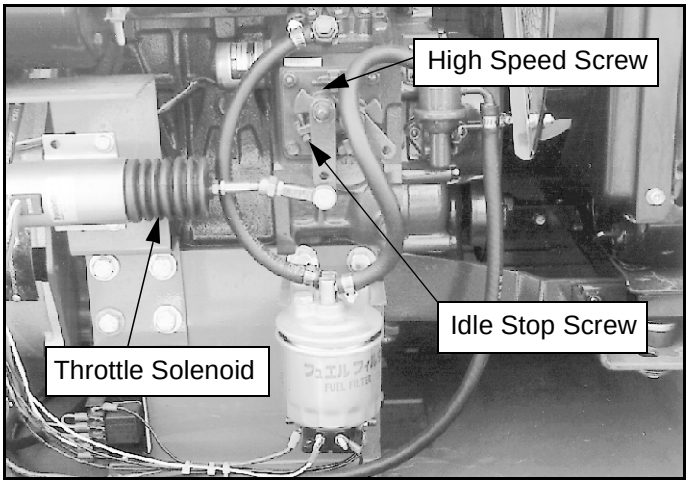

Figure 3-34: Diesel Engine

3.18 FILTER REPLACEMENT

Use the following procedures for replacing the engine air and fuel filters. Refer to Section 3.7, Lubrication for hydraulic and engine oil filter replacement procedures.

Gasoline/Propane Engine

Air Filter Element (Figure 3-35)

1. Unlock the two catches holding the filter canister closed.
2. Remove the wingnut from the filter assembly.
3. Remove and replace the air filter element.
4. Replace the wingnut, tighten.
5. Replace the cover and lock the catches.

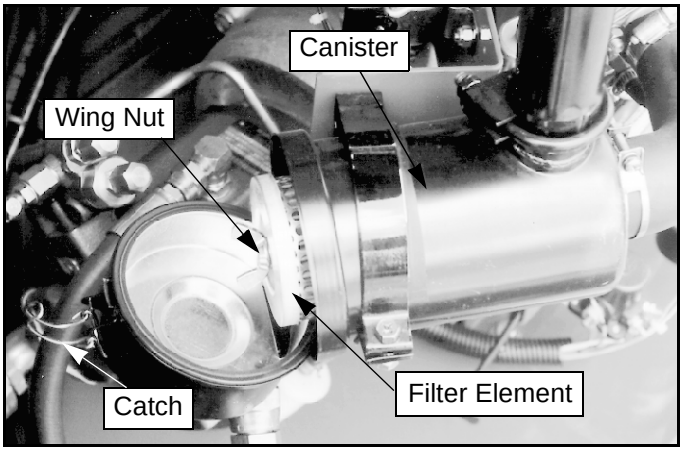

Figure 3-35: Gasoline Engine Air Filter

Fuel Filter (Figure 3-36)

1. Use a screwdriver to loosen the hose clamps on the fuel lines. Slide the clamps out of the way.
2. Remove the in-line filter from the two lines.
3. Replace the filter, noting the direction of fuel flow as shown by the arrow on the body of the filter.
4. Reposition the clamps, tighten.

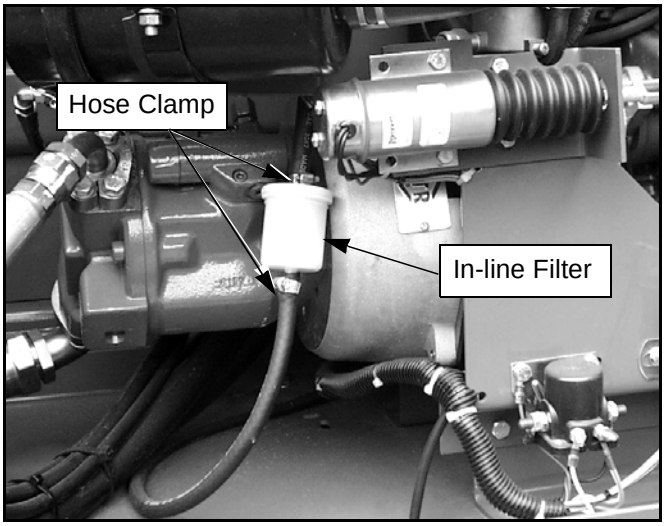

Figure 3-36: Gasoline Engine Fuel Filter

Diesel Engine

Air Filter Element (Figure 3-37)

1. Remove the wingbolt from the filter canister.
2. Remove and replace the filter element.
3. Replace the wingbolt, tighten.

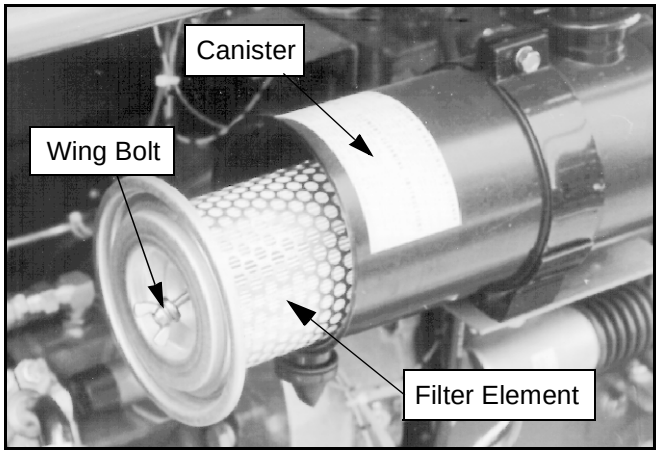

Figure 3-37: Diesel Engine Air Filter

Fuel Filter (Figure 3-38)

1. Provide a suitable container to catch spilled fuel, place under the fuel filter assembly.
2. Use a filter wrench to unscrew the fuel filter.
3. Remove and replace the filter.
4. Loosen the bleeder screw on the injector pump.
5. Operate the lift pump hand lever to pump fuel through the filter and up to the injector pump. Continue to pump until all of the air is bled from the system.
6. Tighten the bleeder screw.

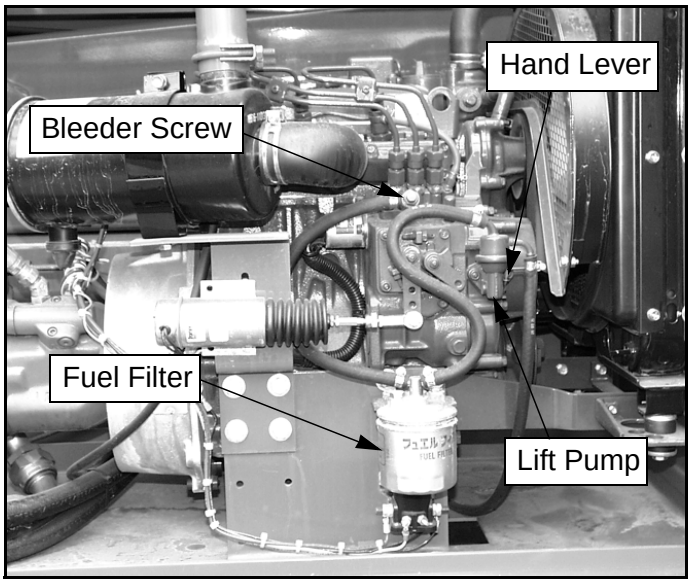

Figure 3-38: Diesel Engine Fuel Filter

3.19 TORQUE SPECIFICATIONS

Fasteners

Use the following values to torque fasteners used on UpRight Work Platforms unless a specific torque value is called out for the part being installed.

Hydraulic Components

Use the following values to torque hydraulic components used on UpRight Work Platforms.

Note: Always lubricate threads with clean hydraulic oil prior to installation

Table 3-3: Torque Specifications for Fasteners

AMERICAN STANDARD CAP SCREWS								
SAE GRADE	5				8			
Cap Screw Size (inches)	TORQUE				TORQUE			
	Ft./Lbs		Nm.		Ft./Lbs.		Nm.	
	MIN	MAX	MIN	MAX	MIN	MAX	MIN	MAx
1/4 - 20	6.25	7.25	8.5	10	8.25	9.5	11	13
1/4 - 28	8	9	11	12	10.5	12	14	16
5/16 - 18	14	15	19	20	18.5	20	25	27
5/16 - 24	17.5	19	23	26	23	25	31	34
3/8 - 16	26	28	35	38	35	37	47.5	50
3/8 - 24	31	34	42	46	41	45	55.5	61
7/16 - 14	41	45	55.5	61	55	60	74.5	81
7/16 - 20	51	55	69	74.5	68	75	92	102
1/2 - 13	65	72	88	97.5	86	96	116	130
1/2 - 20	76	84	103	114	102	112	138	152
9/16 - 12	95	105	129	142	127	140	172	190
9/16 - 18	111	123	150	167	148	164	200	222
5/8 - 11	126	139	171	188	168	185	228	251
5/8 - 18	152	168	206	228	203	224	275	304
3/4 - 10	238	262	322	355	318	350	431	474
3/4 - 16	274	302	371	409	365	402	495	544
7/8 - 9	350	386	474	523	466	515	631	698
7/8 - 14	407	448	551	607	543	597	736	809
1 - 8	537	592	728	802	716	790	970	1070
1 - 14	670	740	908	1003	894	987	1211	1337

METRIC CAP SCREWS								
METRIC GRADE	8.8				10.9			
Cap Screw Size (millimeters)	TORQUE				TORQUE			
	Ft./Lbs.		Nm.		Ft./Lbs.		Nm.	
	MIN	MAX	MIN	MAX	MIN	MAX	MIN	MAX
M6 x 1.00	6	8	8	11	9	11	12	15
M8 x 1.25	16	20	21.5	27	23	27	31	36.5
M10 x 1.50	29	35	39	47	42	52	57	70
M12 x 1.75	52	62	70	84	75	91	102	123
M14 x 2.00	85	103	115	139	120	146	163	198
M16 x 2.50	130	158	176	214	176	216	238	293
M18 x 2.50	172	210	233	284	240	294	325	398
M20 x 2.50	247	301	335	408	343	426	465	577
M22 x 2.50	332	404	450	547	472	576	639	780
M24 x 3.00	423	517	573	700	599	732	812	992
M27 x 3.00	637	779	863	1055	898	1098	1217	1488
M30 x 3.00	872	1066	1181	1444	1224	1496	1658	2027

NOTE: These values apply to fasteners as received from the supplier, dry or when lubricated with normal engine oil. They do not apply if special graphited or molydisulphide greases or other extreme pressure lubricants are used

Table 3-4: Torque Specifications for Hydraulic Components

Type: SAE Part Series	Cartridge Poppet		Fittings		Hoses	
	Ft/Lbs	Nm	Ft/Lbs	Nm	Ft/Lbs	Nm
#4	N/A	N/A	N/A	N/A	135-145	15-16
#6	N/A	N/A	10-20	14-27	215-245	24-28
#8	25-30	34-41	25-30	34-41	430-470	49-53
#10	35-40	47-54	35-40	47-54	680-750	77-85
#12	85-90	115-122	85-90	115-122	950-1050	107-119
#16	130-140	176-190	130-140	176-190	1300-1368	147-155

Notes:

Section 4

TROUBLESHOOTING

4.1 INTRODUCTION

The following section contains Troubleshooting Truth Tables that are to be used in conjunction with the Electrical Schematics in *Section 5*. Identify the symptom the machine exhibits and locate the corresponding component that may be the source of the problem.

Referring to *Section 2* and *Section 5* will aid in understanding the operation and function of the various components and systems of the LX50 and help diagnosing and repair of the machine. This manual cannot cover all possible problems that may occur. If a specific problem is not covered in this manual, call our toll free number for service assistance.

For Service assistance, in the U.S.A., call:
1-800-926-LIFT
From outside the U.S.A., call 1-559-896-5150

General Procedure

Troubleshooting should be carried out in two steps. First, thoroughly study both hydraulic and electric schematics to determine possible causes. Loose terminal connections and short circuits are always a potential cause when troubleshooting. Second, check suspect components electrically, hydraulically and mechanically to determine if they are at fault.

WARNING

When troubleshooting, ensure that the work platform is resting on a firm, level surface.

When performing any service which requires the Platform to be raised, the Elevating Assembly must be blocked (Figure 3-3).

Disconnect the battery ground cable when replacing or testing the continuity of any electrical component.

Electrical Truth Tables **page**

Hydraulic Truth Tables

4.2 ELECTRICAL TRUTH TABLES

Table 4-1: Electrical Truth Table - Dual Fuel Models (2wd: 067535-054, 4wd: 067535-056)

	Component / Function	Motor Start & Run	Upper Control Functions	Lower Control Functions	Raise Platform	Lower Platform	Drive Forward	Drive Reverse	High/Low Speed	Steer Right	Steer Left	Down Alarm	Tilt Alarm
ALM1	Alarm					X						X	X
ALT	Alternator	X											
BAT	Battery	X				X							
CB1	Circuit Breaker	X		X	X	X	X	X					
CB2	Circuit Breaker, Emergency Stop			X	X	X	X	X					
*CB3	Circuit Breaker			X									
*CB4	Circuit Breaker						X	X					
*CB5	Circuit Breaker						X	X	X				
*CB6	Circuit Breaker												
*CB7	Circuit Breaker						X	X	X				
*CB8	Circuit Breaker		X	X	X	X	X	X	X				
*CB10	Circuit Breaker		X	X									
*CB13	Circuit Breaker												
*CB14	Circuit Breaker												
CB15	Circuit Breaker			X									
D1	Diode	X											
D2,3	Diodes						X	X	X				
D4	Diode		X										
*D5-40,53	Diodes	Spike Protection											
DIST	Distributor	X											
FP	Fuel Pump	X											
J1	Jumper, Axle Float Setting			X									
J2	Jumper, 8 Meter Limit Setting				X		X	X	X				
J3	Jumper, Outrigger Setting				X		X	X	X				
J4	Jumper, Outrigger Setting				X		X	X	X				
L1	LED, Drive Enable												
L3	LED, Forward	Indicates output from corresponding function from circuit board											
L4	LED, Reverse												
L5	LED, Drive												
L6	LED, Up												
L7	LED, Torque												
L8	LED, Axle Float												
L9	LED, Down												
L10	LED, Steer Right												
L11	LED, Steer Left												
L12	LED, Throttle												
L13	LED, Choke												

Component	Function	Motor Start & Run	Upper Control Functions	Lower Control Functions	Raise Platform	Lower Platform	Drive Forward	Drive Reverse	High/Low Speed	Steer Right	Steer Left	Down Alarm	Tilt Alarm
PCB1	Circuit Board, Upper Controller		X		X		X	X					
PS1	Oil Pressure Switch	X											
*R1	Relay, Series Parallel						X	X	X				
*R2	Relay, Axle Float			X									
*R3	Relay, Down Alarm											X	
*R4	Relay, Steer Right									X			
*R5	Relay, Steer Left										X		
*R6	Relay, Throttle						X	X	X				
*R7	Relay, Up				X	X							
*R8	Relay, Choke		X	X	X	X	X	X	X				
*R10	Relay, Reverse							X					
*R11	Relay, Forward						X						
*R13	Relay, Platform Down				X	X							
*R14	Relay, Lift Cutout				X								
*R15	Relay, Drive Cutout						X	X	X				
*R16	Relay, PWM Cutout			X									
*R17-18	Relays, Drive						X	X	X				
*R19-20	Relays, Drive/Lift				X	X	X	X	X				
*R21	Relay, Power	X	X	X	X	X	X	X	X	X	X	X	X
R22	Relay, Throttle	X											
R30	Relay, Upper Control Power		X										
*R32	Relay, Start		X	X									
RES3	Resistor, Forward LED	Provides power to corresponding LED											
RES4	Resistor, Reverse LED												
RES5	Resistor, Drive LED												
RES6	Resistor, Up LED												
RES7	Resistor, Torque LED												
RES8	Resistor, Axle Float LED												
RES9	Resistor, Down LED												
RES10	Resistor, Steer Right LED												
RES11	Resistor, Steer Left LED												
RES12	Resistor, Throttle LED												
RES13	Resistor, Choke LED												
S1	Switch, Micro		X		X	X	X	X					
S2	Switch, Reverse Micro		X			X		X					
S3	Switch, Forward Micro		X		X		X						
S4	Switch, Micro Interlock		X		X	X	X	X		X	X		
S5	Switch, Steering Micro		X							X	X		
S6	Switch, Drive		X		X	X	X	X					
S7	Switch, Lift		X		X	X	X	X					

TROUBLESHOOTING

	Component / Function	Motor Start & Run	Upper Control Functions	Lower Control Functions	Raise Platform	Lower Platform	Drive Forward	Drive Reverse	High/Low Speed	Steer Right	Steer Left	Down Alarm	Tilt Alarm
S8	Switch, Torque		X				X	X	X				
S9	Switch, Ignition	X											
S10	Switch, Choke	X											
S11	Switch, Emergency Stop	X											
S12	Switch, Gas	X											
S13	Switch, Propane	X											
S14	Switch, Starter	X											
S15	Switch, Choke	X											
S16	Switch, Engine Stop	X											
S17	Switch, Down			X		X							
S18	Switch, Lift			X	X								
S19	Switch, Throttle	X											
S20	Switch, Emergency Stop	X											
S21	Switch, Chassis/Platform		X	X									
S22-23	Switches, Platform Down								X				X
S24	Switch, Up Limit				X								
**S25	Switch, Axle Float						X	X	X				
SEN1	Sensor, Tilt				X				X				X
SOL1	Solenoid, Throttle	X											
SOL2	Solenoid, LP Shut-off	X											
SOL3	Solenoid, LP	X											
SOL4	Solenoid, Gasoline	X											
SOL5	Solenoid, Choke	X											
SOL6	Solenoid, Proportional				X		X	X					
SOL7	Solenoid, Forward						X						
SOL8	Solenoid, Reverse							X					
SOL9	Solenoid, Up				X								
**SOL10	Solenoid, Shunt						X	X	X				
SOL11	Solenoid, Series/Parallel						X	X	X				
**SOL12	Solenoid, Axle Float						X	X	X				
SOL13	Solenoid, Down					X							
SOL14	Solenoid, Steer Right									X			
SOL15	Solenoid, Steer Left										X		
SOL17	Solenoid, Series/Parallel						X	X	X				
STR	Starter	X											

* On Printed Circuit Board - not serviceable.

** For Four Wheel drive models only.

Table 4-2: Electrical Truth Table - Diesel Models (2wd: 067535-055, 4wd: 067535-057)

Component	Function	Motor Start & Run	Upper Control Functions	Lower Control Functions	Raise Platform	Lower Platform	Drive Forward	Drive Reverse	High/Low Speed	Steer Right	Steer Left	Down Alarm	Tilt Alarm
ALM1	Alarm					X						X	X
ALT	Alternator	X											
BAT	Battery	X				X							
CB1	Circuit Breaker	X		X	X	X	X	X					
CB2	Circuit Breaker, Emergency Stop			X	X	X	X	X					
*CB3	Circuit Breaker			X									
*CB4	Circuit Breaker						X	X					
*CB5	Circuit Breaker						X	X	X				
*CB6	Circuit Breaker												
*CB7	Circuit Breaker						X	X	X				
*CB8	Circuit Breaker		X	X	X	X	X	X	X				
CB9	Circuit Breaker		X	X	X	X	X	X	X				
*CB10	Circuit Breaker		X	X									
*CB13	Circuit Breaker												
*CB14	Circuit Breaker												
CB15	Circuit Breaker			X									
D1	Diode	X											
D2,3	Diodes						X	X	X				
D4	Diode		X										
*D5-40,53	Diodes	Spike Protection											
DIST	Distributor	X											
FP	Fuel Pump	X											
J1	Jumper, Axle Float Setting			X									
J2	Jumper, 8 Meter Limit Setting				X		X	X	X				
J3	Jumper, Outrigger Setting				X		X	X	X				
J4	Jumper, Outrigger Setting				X		X	X	X				
L1	LED, Drive Enable												
L3	LED, Forward	Indicates output from corresponding function from circuit board											
L4	LED, Reverse												
L5	LED, Drive												
L6	LED, Up												
L7	LED, Torque												
L8	LED, Axle Float												
L9	LED, Down												
L10	LED, Steer Right												
L11	LED, Steer Left												
L12	LED, Throttle												
L13	LED, Glow Plug												
PCB1	Circuit Board, Upper Controller		X		X		X	X					

TROUBLESHOOTING

	Component / Function	Motor Start & Run	Upper Control Functions	Lower Control Functions	Raise Platform	Lower Platform	Drive Forward	Drive Reverse	High/Low Speed	Steer Right	Steer Left	Down Alarm	Tilt Alarm
PS1	Oil Pressure Switch	X											
*R1	Relay, Series Parallel						X	X	X				
*R2	Relay, Axle Float			X									
*R3	Relay, Down Alarm											X	
*R4	Relay, Steer Right									X			
*R5	Relay, Steer Left										X		
*R6	Relay, Throttle						X	X	X				
*R7	Relay, Up				X	X							
*R8	Relay, Glow		X	X	X	X	X	X	X				
*R10	Relay, Reverse							X					
*R11	Relay, Forward						X						
*R13	Relay, Platform Down				X	X							
*R14	Relay, Lift Cutout				X								
*R15	Relay, Drive Cutout						X	X	X				
*R16	Relay, PWM Cutout			X									
*R17-18	Relays, Drive						X	X	X				
*R19-20	Relays, Drive/Lift				X	X	X	X	X				
*R21	Relay, Power	X	X	X	X	X	X	X	X	X	X	X	X
R22	Relay, Throttle	X											
R23	Relay, Glow Plug	X											
R30	Relay, Upper Control Power		X										
*R32	Relay, Start		X	X									
RES1	Resistor, Glow Plugs	X											
RES3	Resistor, Forward LED	Provides power to corresponding LED											
RES4	Resistor, Reverse LED												
RES5	Resistor, Drive LED												
RES6	Resistor, Up LED												
RES7	Resistor, Torque LED												
RES8	Resistor, Axle Float LED												
RES9	Resistor, Down LED												
RES10	Resistor, Steer Right LED												
RES11	Resistor, Steer Left LED												
RES12	Resistor, Throttle LED												
RES13	Resistor, Glow Plug LED												
S1	Switch, Micro		X		X	X	X	X					
S2	Switch, Reverse Micro		X			X		X					
S3	Switch, Forward Micro		X		X		X						
S4	Switch, Micro Interlock		X		X	X	X	X		X	X		
S5	Switch, Steering Micro		X							X	X		
S6	Switch, Drive		X		X	X	X	X					

Component	Function	Motor Start & Run	Upper Control Functions	Lower Control Functions	Raise Platform	Lower Platform	Drive Forward	Drive Reverse	High/Low Speed	Steer Right	Steer Left	Down Alarm	Tilt Alarm
S7	Switch, Lift		X		X	X	X	X					
S8	Switch, Torque		X				X	X	X				
S9	Switch, Ignition	X											
S10	Switch, Glow	X											
S11	Switch, Emergency Stop	X											
S14	Switch, Starter	X											
S15	Switch, Glow	X											
S16	Switch, Engine Stop	X											
S17	Switch, Down			X		X							
S18	Switch, Lift			X	X								
S19	Switch, Throttle	X											
S20	Switch, Emergency Stop	X											
S21	Switch, Chassis/Platform		X	X									
S22-23	Switches, Platform Down								X				X
S24	Switch, Up Limit				X								
**S25	Switch, Axle Float						X	X	X				
SEN1	Sensor, Tilt				X				X				X
SOL1	Solenoid, Throttle	X											
SOL5	Solenoid, Kubota Run	X											
SOL6	Solenoid, Proportional				X		X	X					
SOL7	Solenoid, Forward						X						
SOL8	Solenoid, Reverse							X					
SOL9	Solenoid, Up				X								
**SOL10	Solenoid, Shunt						X	X	X				
SOL11	Solenoid, Series/Parallel						X	X	X				
**SOL12	Solenoid, Axle Float						X	X	X				
SOL13	Solenoid, Down					X							
SOL14	Solenoid, Steer Right									X			
SOL15	Solenoid, Steer Left										X		
SOL17	Solenoid, Series/Parallel						X	X	X				
STR	Starter	X											

* On Printed Circuit Board - not serviceable.

** For Four Wheel drive models only.

Table 4-3: Electrical Truth Table - Outrigger Option

Component	Function	Deploy Outriggers	Retract Outriggers
CB11	Circuit Breaker	X	X
J3	Jumper, Outrigger Setting		
J4	Jumper, Outrigger Setting		
L14,16,18,20	LED, Outrigger Extend	X	
L15,17,19,21	LED, Outrigger Retract		X
PS2-5	Pressure Switches, Outrigger	X	
R24	Relay, Outrigger Extend (Right-Front)	X	
R25	Relay, Outrigger Retract (Right-Front)		X
R26	Relay, Outrigger Extend (Left-Front)	X	
R27	Relay, Outrigger Retract (Left-Front)		X
R28	Relay, Outrigger Extend (Right-Rear)	X	
R29	Relay, Outrigger Retract (Right-Rear)		X
R30	Relay, Outrigger Extend (Left-Rear)	X	
R31	Relay, Outrigger Retract (Left-Rear)		X
R32	Relay, Outrigger Power	X	X
*R33	Relay, Outrigger Pressure Switch Override		X
**R34	Relay, Override 2		
S27-30	Switches, Drive Interlock		X
S51	Switch, Outrigger Extend/Retract (Left-Front)	X	X
S52	Switch, Outrigger Extend/Retract (Left-Rear)	X	X
S53	Switch, Outrigger Extend/Retract (Right-Rear)	X	X
S54	Switch, Outrigger Extend/Retract (Right-Front)	X	X
SOL20	Solenoid, Outrigger Extend (Left-Front)	X	
SOL21	Solenoid, Outrigger Retract (Left-Front)		X
SOL22	Solenoid, Outrigger Extend (Right-Front)	X	
SOL23	Solenoid, Outrigger Retract (Right-Front)		X
SOL24	Solenoid, Outrigger Extend (Left-Rear)	X	
SOL25	Solenoid, Outrigger Retract (Left-Rear)		X
SOL26	Solenoid, Outrigger Extend (Right-Rear)	X	
SOL27	Solenoid, Outrigger Retract (Right-Rear)		X

4.3 HYDRAULIC TRUTH TABLES

Table 4-4: Hydraulic Truth Table - Two Wheel Drive Model (067534-014)

Component	Function	Raise Platform	Lower Platform	Drive Forward	Drive Reverse	High/Low Speed	Steer Right	Steer Left	Brakes
CP1	Cavity Plug			X	X	X			
CP2	Cavity Plug	X		X	X	X	X	X	X
CV1	Check Valve			X	X	X			
CYL1	Cylinder, Steering						X	X	
CYL2,3	Cylinders, Lift	X	X						
CYL4,5	Cylinders, Brake			X	X	X			X
MOT1,2	Motors, Rear Drive			X	X	X			
ORF1	Orifice, Steering						X	X	
ORF2,3	Orifices, Down		X						
ORF4	Orifice, Brake								X
P1	Pump, Hydraulic	X		X	X	X	X	X	X
P2	Pump, Brake Release								X
RV1	Relief Valve, Steering						X	X	
RV3	Relief Valve, Lift	X							
RV4,5	Relief Valves, Bi-Directional			X	X	X			
SV1	Shuttle Valve, Sense Line						X	X	
SV2	Shuttle Valve, Sense Line	X		X	X	X	X	X	
SV3	Shuttle Valve, Drive			X	X				
SV4	Shuttle Valve, Sense Line	X		X	X	X	X	X	
V1	Valve, Steering						X	X	
V2	Valve, Emergency Down		X						
V3	Valve, Proportional	X		X	X	X			
V4	Valve, Lift	X							
V5	Valve, Forward			X		X			
V6	Valve, Reverse				X	X			
V7	Valve, Reverse Counterbalance				X				
V8	Valve, Forward Counterbalance			X					
V9,10	Valves, Series/Parallel			X	X	X			
V11	Valve, Flow Divider			X	X	X			
V12,13	Valves, Down		X						
V14,15	Valves, Velocity Fuse		X						

Table 4-5: Hydraulic Truth Table - Four Wheel Drive Model (067534-015)

Component	Function	Raise Platform	Lower Platform	Drive Forward	Drive Reverse	High/Low Speed	Steer Right	Steer Left	Brakes
CP1	Cavity Plug			X	X	X			
CV1	Check Valve			X	X	X			
CYL1	Cylinder, Steering						X	X	
CYL2,3	Cylinder, Lift	X	X						
CYL4,5	Cylinders, Brake			X	X	X			
CYL6	Cylinder, Axle Float			X	X				
MOT1,2	Motors, Rear Drive			X	X	X			
MOT3,4	Motors, Front Drive			X	X	X			
ORF1	Orifice, Steering						X	X	
ORF2,3	Orifice, Down		X						
ORF4	Orifice, Brake								X
P1	Pump, Hydraulic	X		X	X	X	X	X	X
P2	Pump, Brake Release								X
RV1	Relief Valve, Steering						X	X	
RV3	Relief Valve, Lift	X							
RV4,5	Relief Valve, Bi-Directional			X	X	X			
SV1	Shuttle Valve, Sense Line						X	X	
SV2	Shuttle Valve, Sense Line	X		X	X	X	X	X	X
SV3	Shuttle Valve, Drive			X	X	X			X
SV4	Shuttle Valve, Sense Line	X		X	X	X	X	X	X
V1	Valve, Steering						X	X	
V2	Valve, Emergency Down		X						
V3	Valve, Proportional	X		X	X	X	X	X	
V4	Valve, Axle Float			X	X				
V5	Valve, Forward			X		X			
V6	Valve, Reverse				X				
V7	Valve, Reverse Counterbalance				X				
V8	Valve, Forward Counterbalance			X					
V9,10	Valves, Series/Parallel			X	X	X			
V11	Valve, Shunt			X	X	X			
V12,13	Valves, Down		X						
V14,15	Valves, Velocity Fuse		X						
V16	Valve, Lift	X							

Table 4-6: Hydraulic Truth Table - Two Wheel Drive Model w/ Outriggers (067534-016)

Component	Function	Raise Platform	Lower Platform	Drive Forward	Drive Reverse	High/Low Speed	Steer Right	Steer Left	Brakes	Deploy Outriggers
CP1	Cavity Plug			X	X	X	X	X		
CP2	Cavity Plug	X		X	X	X	X	X	X	
CV1	Check Valve			X	X	X				
CV3-6	Check Valves, Outrigger Sense Line									X
CYL1	Cylinder, Steering						X	X		
CYL2,3	Cylinders, Lift	X	X							
CYL4,5	Cylinders, Brake			X	X	X			X	
CYL6-9	Cylinders, Outrigger									X
MOT1,2	Motors, Rear Drive			X	X	X				
ORF1	Orifice, Steering						X	X		
ORF2,3	Orifice, Down		X							
ORF4	Orifice, Brake								X	
ORF5	Orifice, Outrigger									X
P1	Pump, Hydraulic	X		X	X	X	X	X	X	
P2	Pump, Brake Release								X	
RV1	Relief Valve, Steering						X	X		
RV3	Relief Valve, Lift	X	X							
RV4,5	Relief Valve, Bi-Directional			X	X	X				
SV1	Shuttle Valve, Sense Line						X	X		
SV2	Shuttle Valve, Sense Line	X		X	X	X	X	X		
SV3	Shuttle Valve, Drive			X	X					
SV4	Shuttle Valve, Sense Line	X		X	X	X	X	X		
V1	Valve, Steering						X	X		
V2	Valve, Emergency Down	X	X							
V3	Valve, Proportional	X		X	X	X				
V4	Valve, Lift	X								
V5	Valve, Forward			X		X				
V6	Valve, Reverse				X	X				
V7	Valve, Reverse Counterbalance				X					
V8	Valve, Forward Counterbalance			X						
V9,10	Valves, Series/Parallel			X	X	X				
V11	Valve, Flow Divider			X	X	X				
V12,13	Valves, Down		X							
V14,15	Valves, Velocity Fuse		X							
V19-22	Valve, Outrigger (Left Hand, Front)									X

Table 4-7: Hydraulic Truth Table - Four Wheel Drive Model w/ Outriggers (067534-017)

Component	Function	Raise Platform	Lower Platform	Drive Forward	Drive Reverse	High/Low Speed	Steer Right	Steer Left	Brakes	Deploy Outriggers
CV1	Check Valve			X	X	X				
CV3-6	Check Valves, Outrigger Sense Line									X
CP1	Cavity Plug			X	X	X				
CYL1	Cylinder, Steering						X	X		
CYL2,3	Cylinders, Lift	X	X							
CYL4,5	Cylinders, Brake			X	X	X				
CYL6-9	Cylinders, Outrigger									X
CYL10	Cylinder, Axle Float			X	X					
MOT1,2	Motors, Rear Drive			X	X	X				
MOT3,4	Motors, Front Drive			X	X	X				
ORF1	Orifice, Steering						X	X		
ORF2,3	Orifices, Down		X							
ORF4	Orifice, Brake								X	
ORF5	Orifice, Outrigger									X
P1	Pump, Hydraulic	X		X	X	X	X	X	X	
P2	Pump, Brake Release								X	
RV1	Relief Valve, Steering						X	X		
RV3	Relief Valve, Lift	X								
RV4,5	Relief Valves, Bi-Directional			X	X	X				
RV6-13	Relief Valves, Outrigger									X
SV1	Shuttle Valve, Sense Line						X	X		
SV2	Shuttle Valve, Sense Line	X		X	X	X	X	X	X	
SV3	Shuttle Valve, Drive			X	X	X			X	
SV4	Shuttle Valve, Sense Line	X		X	X	X	X	X	X	
V1	Valve, Steering						X	X		
V2	Valve, Emergency Down	X	X							
V3	Valve, Proportional	X		X	X	X	X	X		
V4	Valve, Lift	X								
V5	Valve, Forward			X		X				
V6	Valve, Reverse				X					
V7	Valve, Reverse Counterbalance				X					
V8	Valve, Forward Counterbalance			X						
V9,10	Valves, Series/Parallel			X	X	X				
V11	Valve, Shunt			X	X	X				
V12,13	Valves, Down		X							
V14,15	Valves, Velocity Fuse		X							
V19-22	Valves, Outrigger									X
V23	Valve, Axle Float			X	X					

Section 5

SCHEMATICS

5.1 INTRODUCTION

This section contains electrical and hydraulic power schematics and associated information for maintenance purposes.

The diagrams are to be used in conjunction with the *Troubleshooting Truth Tables* in *Section 4.* They allow understanding of the makeup and functions of the systems for checking, tracing, and faultfinding during troubleshooting analysis.

The components that comprise the electrical and hydraulic systems are given a reference designation and are explained as to function and location in the following tables.

Schematics **Page**

Tables **Page**

5.1 ELECTRICAL SCHEMATIC

Table 1: Electrical Schematic Legend: Two Wheel Drive, Dual Fuel Model (067535-054)

DESIG-NATION	NAME	FUNCTION	LOCATION
ALM1	Alarm	Provides warning sound when slope of machine exceeds 3° side-to-side, or fore and aft and also when deck is lowering.	Chassis Body
ALT	Alternator	Maintains current during operation.	Power Module
BAT	Battery	Provides power for starting engine.	Power Module
CB1	Circuit Breaker, Power	Supplies power to all function solenoids.	Lower Controls
CB2	Circuit Breaker, Emergency Stop	Supplies power to Upper Control ignition switch	Lower Controls
CB3	Circuit Breaker	Supplies power to Lower Controls	Power Module
CB4	Circuit Breaker	Supplies power to Relay R11	On Relay R11
CB5	Circuit Breaker	Supplies power to Relay R1	On Relay R1
CB6	Circuit Breaker	Supplies power to Relay R2	On Relay R2
CB7	Circuit Breaker	Supplies power to Relay R6	On Relay R6
CB8	Circuit Breaker	Supplies power to Relay R8	On Relay R8
CB9	Circuit Breaker	Overcurrent protection	Control Module
CB10	Circuit Breaker	Supplies power to relay R32	On Relay R32
CB13	Circuit Breaker	Supplies power to Outrigger option switches S36-38.	On Switch S37
CB14	Circuit Breaker	Supplies power to Outrigger option switches S39-41.	On Switch S40
CB15	Circuit Breaker	Supplies power to Lower Controls	Lower Controls
D1	Diode	Spike Protection	Power Module
D2	Diode	Spike Protection	Power Module
D3	Diode	Spike Protection	Power Module
D4	Diode	Spike Protection	Upper Controls
D5	Diode	Spike Protection	Lower Controls
D6	Diode	Spike Protection	Lower Controls
D7	Diode	Spike Protection	Lower Controls
D8	Diode	Spike Protection	Control Module
D9	Diode	Spike Protection	Control Module
D10	Diode	Spike Protection	On Relay R20
D11	Diode	Spike Protection	On Relay R18
D12	Diode	Spike Protection	On Relay R17
D13-16	Diodes	Spike Protection	On Relay R16
D17	Diode	Spike Protection	
D18	Diode	Spike Protection	On Relay R13
D19	Diode	Spike Protection	
D20	Diode	Spike Protection	On Relay R32
D21	Diode	Spike Protection	On Relay R11
D22	Diode	Spike Protection	On Relay R10
D23	Diode	Spike Protection	On Relay R7
D24	Diode	Spike Protection	On Relay R1
D25	Diode	Spike Protection	On Relay R2
D26	Diode	Spike Protection	On Relay R3

DESIG-NATION	NAME	FUNCTION	LOCATION
D27	Diode	Spike Protection	On Relay R4
D28	Diode	Spike Protection	On Relay R5
D29	Diode	Spike Protection	On Relay R6
D30	Diode	Spike Protection	On Relay R8
D31	Diode	Spike Protection	On Relay R11
D32	Diode	Spike Protection	On Relay R10
D33	Diode	Spike Protection	On Relay R7
D34	Diode	Spike Protection	On Relay R1
D35	Diode	Spike Protection	On Relay R2
D36	Diode	Spike Protection	On Relay R3
D37	Diode	Spike Protection	On Relay R4
D38	Diode	Spike Protection	On Relay R5
D39	Diode	Spike Protection	On Relay R6
D40	Diode	Spike Protection	On Relay R8
D41-44	Diodes	Spike Protection	On Motion Dip Switch
D45	Diode, 10V	Spike Protection	Control Module
D46	Diode	Spike Protection for Alarm	Control Module
D47	Diode	Spike Protection for Alarm	Control Module
D48	Diode, 5V	Spike Protection for Alarm	Control Module
D49	Diode, 10V	Spike Protection for Alarm	Control Module
D50	Diode	Spike Protection for Alarm	Control Module
D51	Diode	Spike Protection for Alarm	Control Module
D52	Diode, 28V	Spike Protection	Control Module
D53	Diode	Spike Protection	On Relay R21
HM	Hour Meter	Counts hours machine is operated	Lower Controls
J1	Axle Float Setting Jumper	Axle Float Settings	Lower Controls
J2	8 Meter Limit Setting Jumper	8 meter cutout settings.	Lower Controls
J3	Outrigger Setting Jumper	Outrigger functions.	Lower Controls
J4	Outrigger Setting Jumper	Outrigger functions.	Lower Controls
L1	Drive Enable LED	Indicates drive enabled	Upper Controls
L3	Forward LED	Indicates Forward functions being used	Circuit Board
L4	Reverse LED	Indicates Reverse functions being used	Circuit Board
L5	Drive LED	Indicates Drive functions being used	Circuit Board
L6	Up LED	Indicates Up functions being used	Circuit Board
L7	Torque LED	Indicates Torque functions being used	Circuit Board
L8	Axle Float LED	Not Used	Circuit Board
L9	Down LED	Indicates Down functions being used	Circuit Board
L10	Steer Right LED	Indicates Steer Right functions being used	Circuit Board

DESIG-NATION	NAME	FUNCTION	LOCATION
L11	Steer Left LED	Indicates Steer Left functions being used	Circuit Board
L12	Throttle LED	Indicates Throttle functions being used	Circuit Board
L13	Choke LED	Indicates Choke functions being used	Circuit Board
PS1	Oil Pressure Switch	Cuts power to engine when oil pressure falls to dangerous levels.	Power Module
R1	Series/Parallel Relay	Switches power to Series/Parallel Solenoids	Control Module
R2	Axle Float Relay	Switches power to Axle Float Solenoid	Control Module
R3	Down Alarm Relay	Switches power to Down Alarm	Control Module
R4	Steer Right Relay	Switches power to Steer Right Solenoid	Control Module
R5	Steer Left Relay	Switches power to Steer Left Solenoid	Control Module
R6	Throttle Relay	Switches power to Throttle Solenoid	Control Module
R7	Up Relay	Switches power to Lift Solenoid	Control Module
R8	Choke Relay	Switches power to Choke Solenoid	Control Module
R10	Reverse Relay	Switches power to Reverse Solenoid	Control Module
R11	Forward Relay	Switches power to Forward Solenoid	Control Module
R13	Platform Down Relay	Cuts power to Series/Parallel Relay when platform is elevated, selecting high torque mode.	Control Module
R14	Lift Cutout Relay	Cuts power to Lift Relay	Control Module
R15	Drive Cutout Relay	Cuts power to Drive and Lift Relays when not energized by level sensor.	Control Module
R16	PWM Cutout	Enables Proportional controls.	Control Module
R17,18	Drive Relays	Cuts power to Forward and Reverse Relays when Cutout Relay is not energized and platform is elevated.	Control Module
R19,20	Drive/Lift Relays	Directs power from Forward and Reverse Switches to either forward/ reverse or up/down relays.	Control Module
R21	Power Relay	Switches power to all Solenoids and engine.	Control Module
R22	Throttle Relay	Switches power to throttle solenoid	Power Module
R30	Upper Control Power Relay	Cuts power to upper controls when lower controls are enabled.	Upper Controls
R32	Start Relay	Provides power to Starter	Control Module
RES3	Forward Resistor	Provides power to Forward LED, L3	Circuit Board
RES4	Reverse Resistor	Provides power to Reverse LED, L4	Circuit Board
RES5	Drive Resistor	Provides power to Drive LED, L5	Circuit Board
RES6	Up Resistor	Provides power to Up LED, L6	Circuit Board
RES7	Torque Resistor	Provides power to Torque LED, L7	Circuit Board
RES8	Axle Float Resistor	Not Used	Circuit Board
RES9	Down Resistor	Provides power to Down LED, L9	Circuit Board
RES10	Steer Right Resistor	Provides power to Steer Right LED, L10	Circuit Board
RES11	Steer Left Resistor	Provides power to Steer Left LED, L11	Circuit Board
RES12	Throttle Resistor	Provides power to Throttle LED, L12	Circuit Board

DESIG-NATION	NAME	FUNCTION	LOCATION
RES13	Choke Resistor	Provides power to Choke LED, L13	Circuit Board
RES14	Alarm Resistor	Current protection for Alarm	Control Module
RES15	Alarm Resistor	Current protection for Alarm	Control Module
RES16	Alarm Resistor	Current protection for Alarm	Control Module
RES17	Alarm Resistor	Current protection for Alarm	Control Module
RES18	Alarm Resistor	Current protection for Alarm	Control Module
RES19	Alarm Resistor	Current protection for Alarm	Control Module
RES20	Alarm Resistor	Current protection for Alarm	Control Module
RES21	Alarm Resistor	Current protection for Alarm	Control Module
RES22	Alarm Resistor	Current protection for Alarm	Control Module
S1	Micro Switch	Supplies power to controller	Upper Cont., Joystick
S2	Reverse Micro Switch	Supplies power to Drive/Lift Relay, Forward/Up contacts.	Upper Controls, Joystick
S3	Forward Micro Switch	Supplies power to Drive/Lift Relay, Reverse/Down contacts.	Upper Controls, Joystick
S4	Interlock Micro Switch	Interrupts power to controls when not ehgaged.	Upper Controls, joystick handle
S5	Steering Micro Switch	Supplies power to Steer Left and Steer Right Relays.	Upper Controls, joystick handle
S6,7	Drive/Lift Switch	Supplies power to Steering Micro Switch (drive) or to Drive/Lift Relay.	Upper Controls
S8	Torque Switch	Supplies power to Series/Parallel Relay.	Upper Controls
S9	Ignition Switch	Supplies power to upper controls, engine, and starter motor solenoid.	Upper Controls
S10	Emergency Stop Switch	Cuts power to upper controls and engine	Upper Controls
S11	Choke Switch	Supplies power to choke relay	Upper Controls
S12	Gas Switch	Supplies power to Fuel Pump and Shut-off Valve..	Lower Controls
S13	Propane Switch	Supplies power to LP Valve.	Lower Controls
S14	Starter Switch	Supplies power to starter motor.	Lower Controls
S15	Choke Switch	Supplies power to choke relay	Lower Controls
S16	Engine Stop Switch	Cuts power to ignition module and fuel shutoff solenoid.	Lower Controls
S17	Down Switch	Supplies power to down relay	Lower Controls
S18	Lift Switch	Supplies power to up relay	Lower Controls
S19	Throttle Switch	Supplies power to throttle relay	Lower Controls
S20	Emergency Stop Switch	Cuts power to lower controls and engine.	Lower Controls
S21	Chassis/Platform Switch	Supplies power to either upper or lower controls.	Lower Controls
S22,23	Platform Down Switches	High/low speed cutout and outrigger lockout.	Chassis Body
S24	Up Limit Switch	Restricts Lift Cylinder from fully extending.	Chassis Body
SOL1	Throttle Solenoid	Controls engine throttle	Power Module
SOL2	LP Shut-off Solenoid	Controls LP Valve	Power Module

DESIG-NATION	NAME	FUNCTION	LOCATION
SOL3	LP Solenoid	Controls LP Valve	Power Module
SOL4	Gasoline Solenoid	Controls fuel Valve	Power Module
SOL5	Choke Solenoid	Controls engine choke	Power Module
SOL6	Proportional Solenoid	Controls Proportional Valve	Valve Manifold
SOL7	Forward Solenoid	Controld Forward Valve	Valve Manifold
SOL8	Reverse Solenoid	Controls Reverse Valve	Valve Manifold
SOL9	Up Solenoid	Controls Lift Valve	Valve Manifold
SOL11	Series/Parallel Solenoid	Controls Series/Parallel Valve	Valve Manifold
SOL13	Down Solenoid	Controls Down Solenoid	Valve Manifold
SOL14	Steer Right Solenoid	Controls Steer Right Valve	Valve Manifold
SOL15	Steer Left Solenoid	Controls Steer Left Valve	Valve Manifold
SOL16	Down Solenoid	Controls Down Valve	Valve Manifold
SOL17	Series/Parallel Solenoid	Controls Series/Parallel Valve	Valve Manifold
STR	Starter	Starts engine	Power Module

Two Wheel Drive, Dual Fuel
Drawing 1 of 2

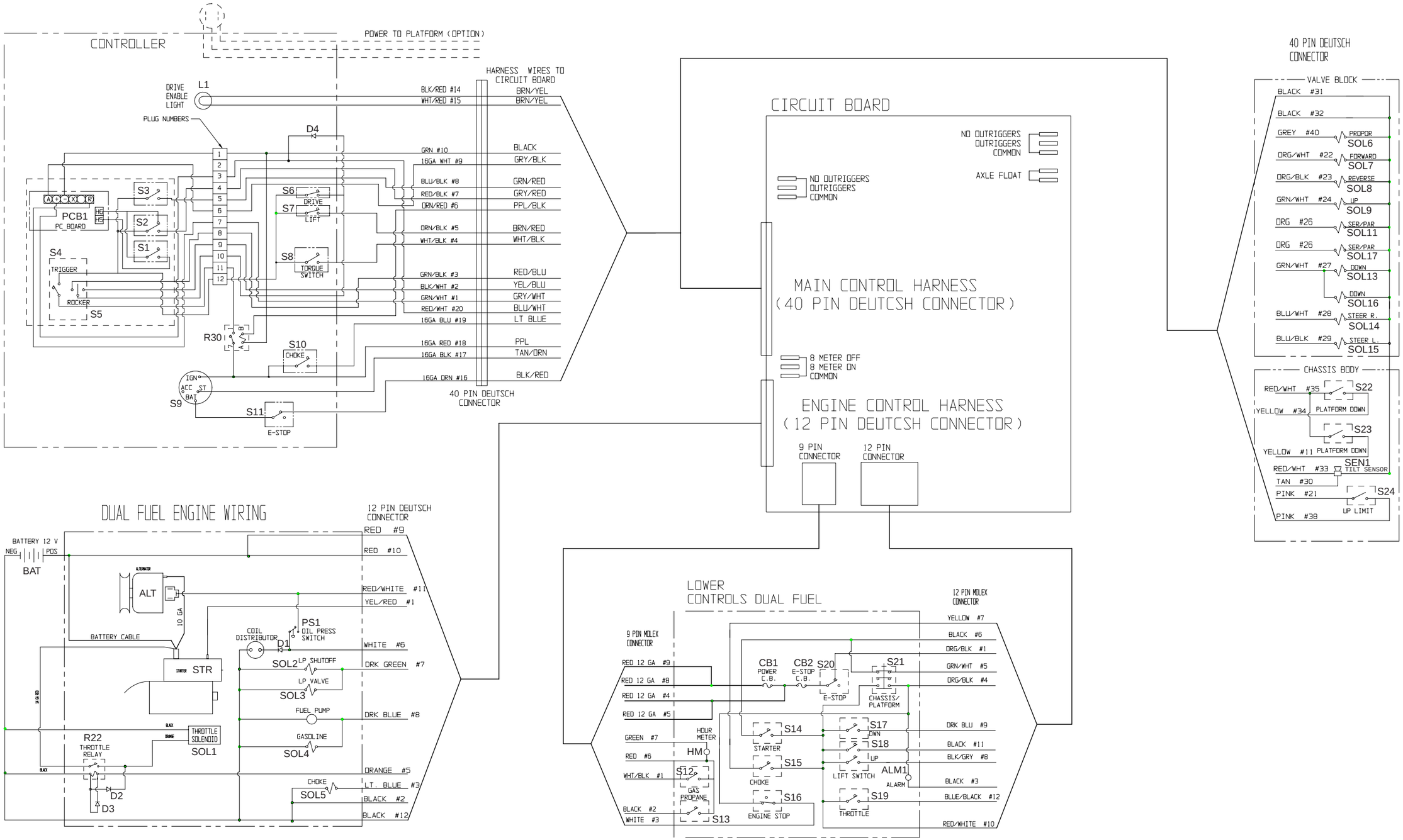

Figure 5-1: Electrical Schematic: Two Wheel Drive, Dual Fuel - 067535-054 (1 of 2)

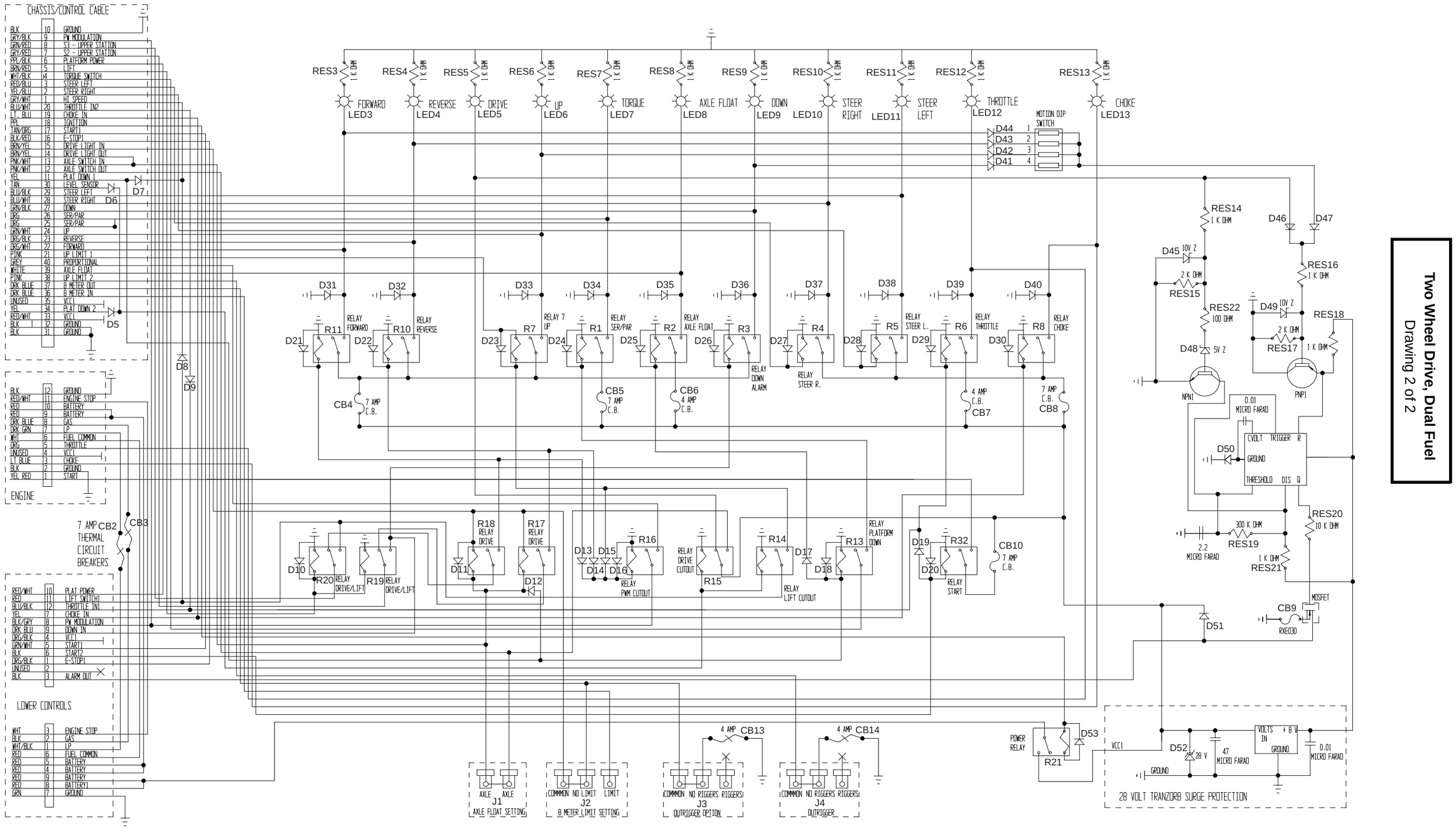

Figure 5-2: Electrical Schematic: Two Wheel Drive, Dual Fuel - 067535-054 (2 of 2)

5.2 ELECTRICAL SCHEMATIC

Table 2: Electrical Schematic Legend: Two Wheel Drive, Diesel Model (067535-055)

DESIG-NATION	NAME	FUNCTION	LOCATION
ALM1	Alarm	Provides warning sound when slope of machine exceeds 3° side-to-side, or fore and aft and also when deck is lowering.	Chassis Body
ALT	Alternator	Maintains current during operation.	Power Module
BAT	Battery	Provides power for starting engine.	Power Module
CB1	Circuit Breaker, Power	Supplies power to all function solenoids.	Lower Controls
CB2	Circuit Breaker, Emergency Stop	Supplies power to Upper Control ignition switch	Lower Controls
CB3	Circuit Breaker	Supplies power to Lower Controls	Power Module
CB4	Circuit Breaker	Supplies power to Relay R11	On Relay R11
CB5	Circuit Breaker	Supplies power to Relay R1	On Relay R1
CB6	Circuit Breaker	Supplies power to Relay R2	On Relay R2
CB7	Circuit Breaker	Supplies power to Relay R6	On Relay R6
CB8	Circuit Breaker	Supplies power to Relay R8	On Relay R8
CB9	Circuit Breaker	Overcurrent protection	Control Module
CB10	Circuit Breaker	Supplies power to relay R32	On Relay R32
CB13	Circuit Breaker	Supplies power to Outrigger option switches S36-38.	On Switch S37
CB14	Circuit Breaker	Supplies power to Outrigger option switches S39-41.	On Switch S40
CB15	Circuit Breaker	Supplies power to Lower Controls	Lower Controls
D1	Diode	Spike Protection	Power Module
D2	Diode	Spike Protection	Power Module
D3	Diode	Spike Protection	Power Module
D4	Diode	Spike Protection	Upper Controls
D5	Diode	Spike Protection	Lower Controls
D6	Diode	Spike Protection	Lower Controls
D7	Diode	Spike Protection	Lower Controls
D8	Diode	Spike Protection	Control Module
D9	Diode	Spike Protection	Control Module
D10	Diode	Spike Protection	On Relay R20
D11	Diode	Spike Protection	On Relay R18
D12	Diode	Spike Protection	On Relay R17
D13-16	Diodes	Spike Protection	On Relay R16
D17	Diode	Spike Protection	
D18	Diode	Spike Protection	On Relay R13
D19	Diode	Spike Protection	
D20	Diode	Spike Protection	On Relay R32
D21	Diode	Spike Protection	On Relay R11
D22	Diode	Spike Protection	On Relay R10
D23	Diode	Spike Protection	On Relay R7
D24	Diode	Spike Protection	On Relay R1
D25	Diode	Spike Protection	On Relay R2
D26	Diode	Spike Protection	On Relay R3

DESIG-NATION	NAME	FUNCTION	LOCATION
D27	Diode	Spike Protection	On Relay R4
D28	Diode	Spike Protection	On Relay R5
D29	Diode	Spike Protection	On Relay R6
D30	Diode	Spike Protection	On Relay R8
D31	Diode	Spike Protection	On Relay R11
D32	Diode	Spike Protection	On Relay R10
D33	Diode	Spike Protection	On Relay R7
D34	Diode	Spike Protection	On Relay R1
D35	Diode	Spike Protection	On Relay R2
D36	Diode	Spike Protection	On Relay R3
D37	Diode	Spike Protection	On Relay R4
D38	Diode	Spike Protection	On Relay R5
D39	Diode	Spike Protection	On Relay R6
D40	Diode	Spike Protection	On Relay R8
D41-44	Diodes	Spike Protection	On Motion Dip Switch
D45	Diode, 10V	Spike Protection	Control Module
D46	Diode	Spike Protection	Control Module
D47	Diode	Spike Protection	Control Module
D48	Diode, 5V	Spike Protection	Control Module
D49	Diode, 10V	Spike Protection	Control Module
D50	Diode	Spike Protection	Control Module
D51	Diode	Spike Protection	Control Module
D52	Diode, 28V	Spike Protection	Control Module
D53	Diode	Spike Protection	On Relay R21
D54	Diode	Spike Protection	On Relay R23
D55	Diode	Spike Protection	On Relay R23
HM	Hour Meter	Counts hours machine is operated	Lower Controls
J1	Axle Float Setting Jumper	Axle Float Settings	Lower Controls
J2	8 Meter Limit Setting Jumper	8 meter cutout settings.	Lower Controls
J3	Outrigger Setting Jumper	Outrigger functions.	Lower Controls
J4	Outrigger Setting Jumper	Outrigger functions.	Lower Controls
L1	Drive Enable LED	Indicates drive enabled	Upper Controls
L3	Forward LED	Indicates Forward functions being used	Circuit Board
L4	Reverse LED	Indicates Reverse functions being used	Circuit Board
L5	Drive LED	Indicates Drive functions being used	Circuit Board
L6	Up LED	Indicates Up functions being used	Circuit Board
L7	Torque LED	Indicates Torque functions being used	Circuit Board
L8	Axle Float LED	Indicates Axle Float functions being used	Circuit Board

DESIG-NATION	NAME	FUNCTION	LOCATION
L9	Down LED	Indicates Down functions being used	Circuit Board
L10	Steer Right LED	Indicates Steer Right functions being used	Circuit Board
L11	Steer Left LED	Indicates Steer Left functions being used	Circuit Board
L12	Throttle LED	Indicates Throttle functions being used	Circuit Board
L13	Choke LED	Indicates Choke functions being used	Circuit Board
PS1	Oil Pressure Switch	Cuts power to engine when oil pressure falls to dangerous levels.	Power Module
R1	Series/Parallel Relay	Switches power to Series/Parallel Solenoids	Control Module
R2	Axle Float Relay	Switches power to Axle Float Solenoid	Control Module
R3	Down Alarm Relay	Switches power to Down Alarm	Control Module
R4	Steer Right Relay	Switches power to Steer Right Solenoid	Control Module
R5	Steer Left Relay	Switches power to Steer Left Solenoid	Control Module
R6	Throttle Relay	Switches power to Throttle Solenoid	Control Module
R7	Up Relay	Switches power to Lift Solenoid	Control Module
R8	Choke Relay	Switches power to Choke Solenoid	Control Module
R10	Reverse Relay	Switches power to Reverse Solenoid	Control Module
R11	Forward Relay	Switches power to Forward Solenoid	Control Module
R13	Platform Down Relay	Cuts power to Series/Parallel Relay when platform is elevated, selecting high torque mode.	Control Module
R14	Lift Cutout Relay	Cuts power to Lift Relay	Control Module
R15	Drive Cutout Relay	Cuts power to Drive and Lift Relays when not energized by level sensor.	Control Module
R16	PWM Cutout	Enables Proportional controls.	Control Module
R17,18	Drive Relays	Cuts power to Forward and Reverse Relays when Cutout Relay is not energized and platform is elevated.	Control Module
R19,20	Drive/Lift Relays	Directs power from Forward and Reverse Switches to either forward/ reverse or up/down relays.	Control Module
R21	Power Relay	Switches power to all Solenoids and engine.	Control Module
R22	Throttle Relay	Switches power to throttle solenoid	Power Module
R23	Glow Plug Relay	Provides power to Glow Plug	Power Module
R30	Upper Control Power Relay	Cuts power to upper controls when lower controls are enabled.	Upper Controls
R32	Start Relay	Provides power to Starter	Control Module
RES1	Glow Plug	Helps start engine when cold	Power Module
RES3	Forward Resistor	Provides power to Forward LED, L3	Circuit Board
RES4	Reverse Resistor	Provides power to Reverse LED, L4	Circuit Board
RES5	Drive Resistor	Provides power to Drive LED, L5	Circuit Board
RES6	Up Resistor	Provides power to Up LED, L6	Circuit Board
RES7	Torque Resistor	Provides power to Torque LED, L7	Circuit Board
RES8	Axle Float Resistor	Provides power to Axle Float LED, L8	Circuit Board

DESIG-NATION	NAME	FUNCTION	LOCATION
RES9	Down Resistor	Provides power to Down LED, L9	Circuit Board
RES10	Steer Right Resistor	Provides power to Steer Right LED, L10	Circuit Board
RES11	Steer Left Resistor	Provides power to Steer Left LED, L11	Circuit Board
RES12	Throttle Resistor	Provides power to Throttle LED, L12	Circuit Board
RES13	Choke Resistor	Provides power to Choke LED, L13	Circuit Board
RES14	Alarm Resistor	Current protection for Alarm	Control Module
RES15	Alarm Resistor	Current protection for Alarm	Control Module
RES16	Alarm Resistor	Current protection for Alarm	Control Module
RES17	Alarm Resistor	Current protection for Alarm	Control Module
RES18	Alarm Resistor	Current protection for Alarm	Control Module
RES19	Alarm Resistor	Current protection for Alarm	Control Module
RES20	Alarm Resistor	Current protection for Alarm	Control Module
RES21	Alarm Resistor	Current protection for Alarm	Control Module
RES22	Alarm Resistor	Current protection for Alarm	Control Module
S1	Micro Switch	Supplies power to controller	Upper Cont., Joystick
S2	Reverse Micro Switch	Supplies power to Drive/Lift Relay, Forward/Up contacts.	Upper Controls, Joystick
S3	Forward Micro Switch	Supplies power to Drive/Lift Relay, Reverse/Down contacts.	Upper Controls, Joystick
S4	Interlock Micro Switch	Interrupts power to controls when not ehgaged.	Upper Controls, joystick handle
S5	Steering Micro Switch	Supplies power to Steer Left and Steer Right Relays.	Upper Controls, joystick handle
S6,7	Drive/Lift Switch	Supplies power to Steering Micro Switch (drive) or to Drive/Lift Relay.	Upper Controls
S8	Torque Switch	Supplies power to Series/Parallel Relay.	Upper Controls
S9	Ignition Switch	Supplies power to upper controls, engine, and starter motor solenoid.	Upper Controls
S10	Emergency Stop Switch	Cuts power to upper controls and engine	Upper Controls
S11	Choke Switch	Supplies power to choke relay	Upper Controls
S14	Starter Switch	Supplies power to starter motor.	Lower Controls
S15	Glow Plug Switch	Supplies power to glow plug relay	Lower Controls
S16	Engine Stop Switch	Cuts power to ignition module and fuel shutoff solenoid.	Lower Controls
S17	Down Switch	Supplies power to down relay	Lower Controls
S18	Lift Switch	Supplies power to up relay	Lower Controls
S19	Throttle Switch	Supplies power to throttle relay	Lower Controls
S20	Emergency Stop Switch	Cuts power to lower controls and engine.	Lower Controls
S21	Chassis/Platform Switch	Supplies power to either upper or lower controls.	Lower Controls
S22,23	Platform Down Switches	High/low speed cutout and outrigger lockout.	Chassis Body
S24	Up Limit Switch	Restricts Lift Cylinder from fully extending.	Chassis Body

DESIG-NATION	NAME	FUNCTION	LOCATION
SOL1	Throttle Solenoid	Controls engine throttle	Power Module
SOL5	Choke Solenoid	Controls engine choke	Power Module
SOL6	Proportional Solenoid	Controls Proportional Valve	Valve Manifold
SOL7	Forward Solenoid	Controld Forward Valve	Valve Manifold
SOL8	Reverse Solenoid	Controls Reverse Valve	Valve Manifold
SOL9	Up Solenoid	Controls Lift Valve	Valve Manifold
SOL11	Series/Parallel Solenoid	Controls Series/Parallel Valve	Valve Manifold
SOL13	Down Solenoid	Controls Down Solenoid	Valve Manifold
SOL14	Steer Right Solenoid	Controls Steer Right Valve	Valve Manifold
SOL15	Steer Left Solenoid	Controls Steer Left Valve	Valve Manifold
SOL16	Down Solenoid	Controls Down Valve	Valve Manifold
SOL17	Series/Parallel Solenoid	Controls Series/Parallel Valve	Valve Manifold
STR	Starter	Starts engine	Power Module

Two Wheel Drive, Diesel
Drawing 1 of 2

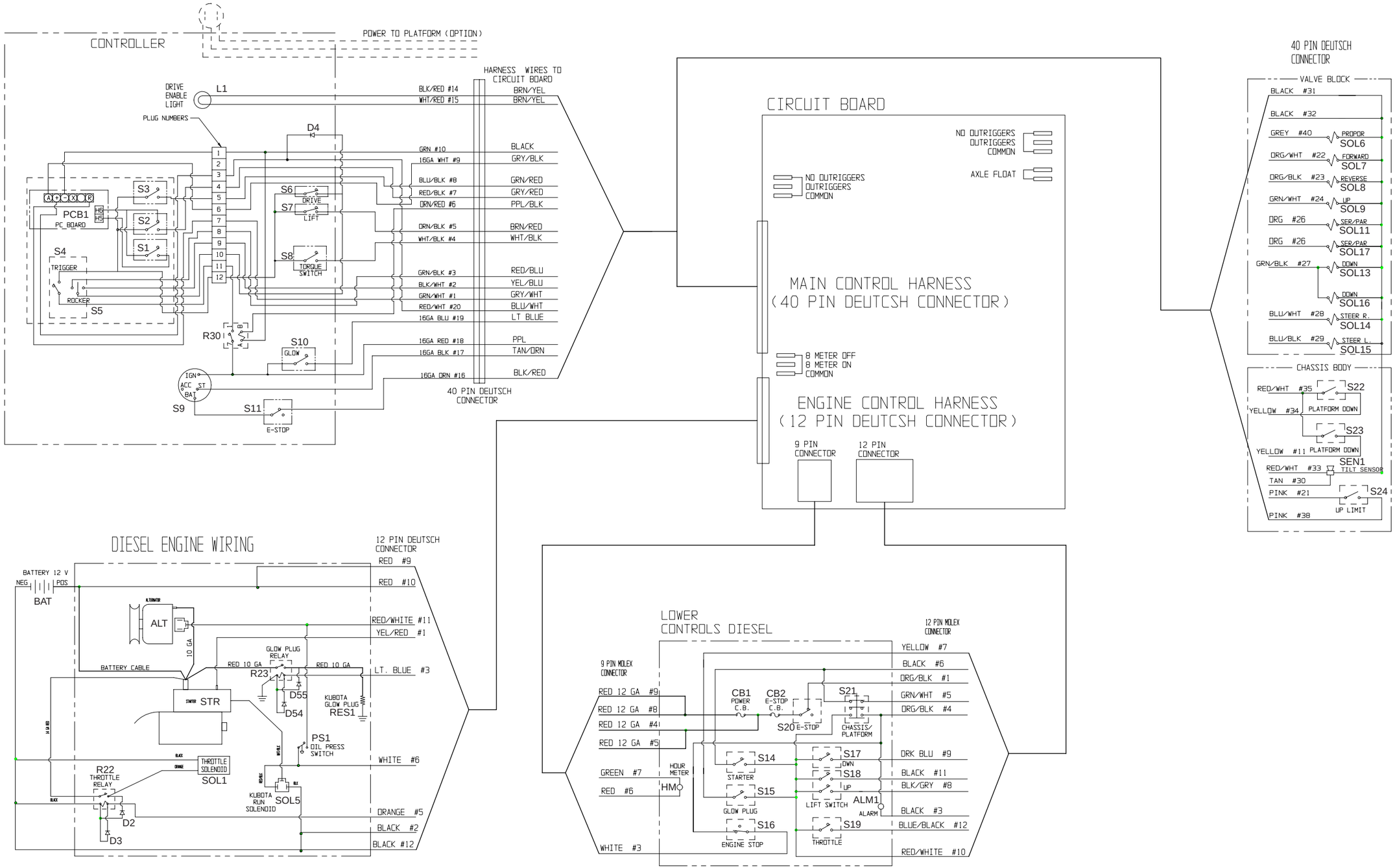

Figure 5-3: Electrical Schematic: Two Wheel Drive, Diesel - 067535-055 (1 of 2)

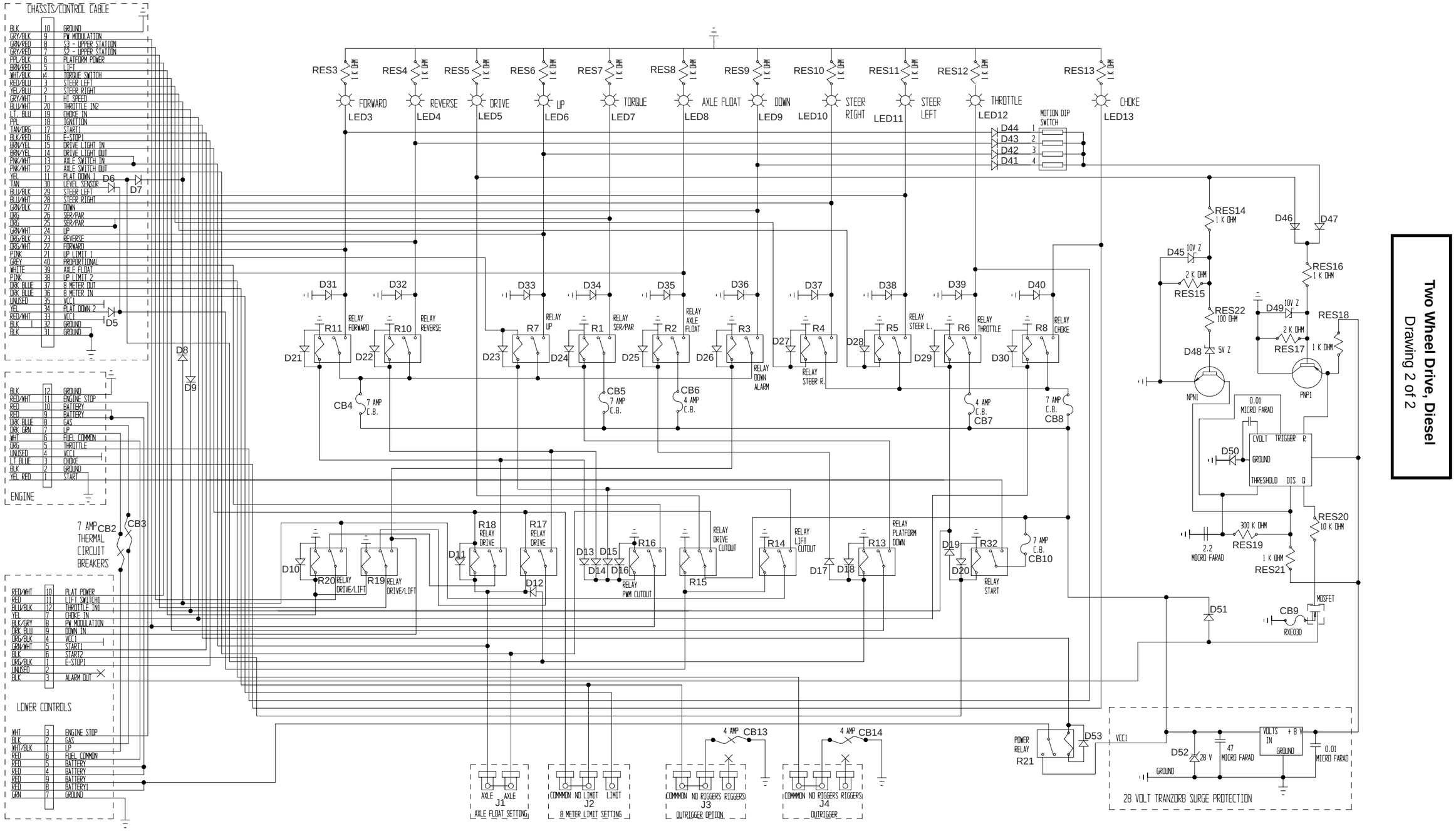

Figure 5-4: Electrical Schematic: Two Wheel Drive, Diesel - 067535-055 (2 of 2)

5.3 ELECTRICAL SCHEMATIC

Table 3: Electrical Schematic Legend: Four Wheel Drive, Dual Fuel Model (067535-056)

DESIG-NATION	NAME	FUNCTION	LOCATION
ALM1	Alarm	Provides warning sound when slope of machine exceeds 3° side-to-side, or fore and aft and also when deck is lowering.	Chassis Body
ALT	Alternator	Maintains current during operation.	Power Module
BAT	Battery	Provides power for starting engine.	Power Module
CB1	Circuit Breaker, Power	Supplies power to all function solenoids.	Lower Controls
CB2	Circuit Breaker, Emergency Stop	Supplies power to Upper Control ignition switch	Lower Controls
CB3	Circuit Breaker	Supplies power to Lower Controls	Power Module
CB4	Circuit Breaker	Supplies power to Relay R11	On Relay R11
CB5	Circuit Breaker	Supplies power to Relay R1	On Relay R1
CB6	Circuit Breaker	Supplies power to Relay R2	On Relay R2
CB7	Circuit Breaker	Supplies power to Relay R6	On Relay R6
CB8	Circuit Breaker	Supplies power to Relay R8	On Relay R8
CB9	Circuit Breaker	Overcurrent protection	Control Module
CB10	Circuit Breaker	Supplies power to relay R32	On Relay R32
CB13	Circuit Breaker	Supplies power to Outrigger option switches S36-38.	On Switch S37
CB14	Circuit Breaker	Supplies power to Outrigger option switches S39-41.	On Switch S40
CB15	Circuit Breaker	Supplies power to Lower Controls	Lower Controls
D1	Diode	Spike Protection	Power Module
D2	Diode	Spike Protection	Power Module
D3	Diode	Spike Protection	Power Module
D4	Diode	Spike Protection	Upper Controls
D5	Diode	Spike Protection	Lower Controls
D6	Diode	Spike Protection	Lower Controls
D7	Diode	Spike Protection	Lower Controls
D8	Diode	Spike Protection	Control Module
D9	Diode	Spike Protection	Control Module
D10	Diode	Spike Protection	On Relay R20
D11	Diode	Spike Protection	On Relay R18
D12	Diode	Spike Protection	On Relay R17
D13-16	Diodes	Spike Protection	On Relay R16
D17	Diode	Spike Protection	
D18	Diode	Spike Protection	On Relay R13
D19	Diode	Spike Protection	
D20	Diode	Spike Protection	On Relay R32
D21	Diode	Spike Protection	On Relay R11
D22	Diode	Spike Protection	On Relay R10
D23	Diode	Spike Protection	On Relay R7
D24	Diode	Spike Protection	On Relay R1
D25	Diode	Spike Protection	On Relay R2
D26	Diode	Spike Protection	On Relay R3

DESIG-NATION	NAME	FUNCTION	LOCATION
D27	Diode	Spike Protection	On Relay R4
D28	Diode	Spike Protection	On Relay R5
D29	Diode	Spike Protection	On Relay R6
D30	Diode	Spike Protection	On Relay R8
D31	Diode	Spike Protection	On Relay R11
D32	Diode	Spike Protection	On Relay R10
D33	Diode	Spike Protection	On Relay R7
D34	Diode	Spike Protection	On Relay R1
D35	Diode	Spike Protection	On Relay R2
D36	Diode	Spike Protection	On Relay R3
D37	Diode	Spike Protection	On Relay R4
D38	Diode	Spike Protection	On Relay R5
D39	Diode	Spike Protection	On Relay R6
D40	Diode	Spike Protection	On Relay R8
D41-44	Diodes	Spike Protection	On Motion Dip Switch
D45	Diode, 10V	Spike Protection	Control Module
D46	Diode	Spike Protection	Control Module
D47	Diode	Spike Protection	Control Module
D48	Diode, 5V	Spike Protection	Control Module
D49	Diode, 10V	Spike Protection	Control Module
D50	Diode	Spike Protection	Control Module
D51	Diode	Spike Protection	Control Module
D52	Diode, 28V	Spike Protection	Control Module
D53	Diode	Spike Protection	On Relay R21
D54	Diode	Spike Protection	On Relay R23
D55	Diode	Spike Protection	On Relay R23
HM	Hour Meter	Counts hours machine is operated	Lower Controls
J1	Axle Float Setting Jumper	Axle Float Settings	Lower Controls
J2	8 Meter Limit Setting Jumper	8 meter cutout settings.	Lower Controls
J3	Outrigger Setting Jumper	Outrigger functions.	Lower Controls
J4	Outrigger Setting Jumper	Outrigger functions.	Lower Controls
L1	Drive Enable LED	Indicates drive enabled	Upper Controls
L3	Forward LED	Indicates Forward functions being used	Circuit Board
L4	Reverse LED	Indicates Reverse functions being used	Circuit Board
L5	Drive LED	Indicates Drive functions being used	Circuit Board
L6	Up LED	Indicates Up functions being used	Circuit Board
L7	Torque LED	Indicates Torque functions being used	Circuit Board
L8	Axle Float LED	Not Used	Circuit Board
L9	Down LED	Indicates Down functions being used	Circuit Board

DESIG-NATION	NAME	FUNCTION	LOCATION
L10	Steer Right LED	Indicates Steer Right functions being used	Circuit Board
L11	Steer Left LED	Indicates Steer Left functions being used	Circuit Board
L12	Throttle LED	Indicates Throttle functions being used	Circuit Board
L13	Choke LED	Indicates Choke functions being used	Circuit Board
PS1	Oil Pressure Switch	Cuts power to engine when oil pressure falls to dangerous levels.	Power Module
R1	Series/Parallel Relay	Switches power to Series/Parallel Solenoids	Control Module
R2	Axle Float Relay	Switches power to Axle Float Solenoid	Control Module
R3	Down Alarm Relay	Switches power to Down Alarm	Control Module
R4	Steer Right Relay	Switches power to Steer Right Solenoid	Control Module
R5	Steer Left Relay	Switches power to Steer Left Solenoid	Control Module
R6	Throttle Relay	Switches power to Throttle Solenoid	Control Module
R7	Up Relay	Switches power to Lift Solenoid	Control Module
R8	Choke Relay	Switches power to Choke Solenoid	Control Module
R10	Reverse Relay	Switches power to Reverse Solenoid	Control Module
R11	Forward Relay	Switches power to Forward Solenoid	Control Module
R13	Platform Down Relay	Cuts power to Series/Parallel Relay when platform is elevated, selecting high torque mode.	Control Module
R14	Lift Cutout Relay	Cuts power to Lift Relay	Control Module
R15	Drive Cutout Relay	Cuts power to Drive and Lift Relays when not energized by level sensor.	Control Module
R16	PWM Cutout	Enables Proportional controls.	Control Module
R17,18	Drive Relays	Cuts power to Forward and Reverse Relays when Cutout Relay is not energized and platform is elevated.	Control Module
R19,20	Drive/Lift Relays	Directs power from Forward and Reverse Switches to either forward/ reverse or up/down relays.	Control Module
R21	Power Relay	Switches power to all Solenoids and engine.	Control Module
R22	Throttle Relay	Switches power to throttle solenoid	Power Module
R30	Upper Control Power Relay	Cuts power to upper controls when lower controls are enabled.	Upper Controls
R32	Start Relay	Provides power to Starter	Control Module
RES3	Forward Resistor	Provides power to Forward LED, L3	Circuit Board
RES4	Reverse Resistor	Provides power to Reverse LED, L4	Circuit Board
RES5	Drive Resistor	Provides power to Drive LED, L5	Circuit Board
RES6	Up Resistor	Provides power to Up LED, L6	Circuit Board
RES7	Torque Resistor	Provides power to Torque LED, L7	Circuit Board
RES8	Axle Float Resistor	Not Used	Circuit Board
RES9	Down Resistor	Provides power to Down LED, L9	Circuit Board
RES10	Steer Right Resistor	Provides power to Steer Right LED, L10	Circuit Board

DESIG-NATION	NAME	FUNCTION	LOCATION
RES11	Steer Left Resistor	Provides power to Steer Left LED, L11	Circuit Board
RES12	Throttle Resistor	Provides power to Throttle LED, L12	Circuit Board
RES13	Choke Resistor	Provides power to Choke LED, L13	Circuit Board
RES14	Alarm Resistor	Current protection for Alarm	Control Module
RES15	Alarm Resistor	Current protection for Alarm	Control Module
RES16	Alarm Resistor	Current protection for Alarm	Control Module
RES17	Alarm Resistor	Current protection for Alarm	Control Module
RES18	Alarm Resistor	Current protection for Alarm	Control Module
RES19	Alarm Resistor	Current protection for Alarm	Control Module
RES20	Alarm Resistor	Current protection for Alarm	Control Module
RES21	Alarm Resistor	Current protection for Alarm	Control Module
RES22	Alarm Resistor	Current protection for Alarm	Control Module
S1	Micro Switch	Supplies power to controller	Upper Cont., Joystick
S2	Reverse Micro Switch	Supplies power to Drive/Lift Relay, Forward/Up contacts.	Upper Controls, Joystick
S3	Forward Micro Switch	Supplies power to Drive/Lift Relay, Reverse/Down contacts.	Upper Controls, Joystick
S4	Interlock Micro Switch	Interrupts power to controls when not ehgaged.	Upper Controls, joystick handle
S5	Steering Micro Switch	Supplies power to Steer Left and Steer Right Relays.	Upper Controls, joystick handle
S6,7	Drive/Lift Switch	Supplies power to Steering Micro Switch (drive) or to Drive/Lift Relay.	Upper Controls
S8	Torque Switch	Supplies power to Series/Parallel Relay.	Upper Controls
S9	Ignition Switch	Supplies power to upper controls, engine, and starter motor solenoid.	Upper Controls
S10	Emergency Stop Switch	Cuts power to upper controls and engine	Upper Controls
S11	Choke Switch	Supplies power to choke relay	Upper Controls
S12	Gasoline Switch	Supplies power to Fuel Pump and Shut-off Valve..	Lower Controls
S13	Propane Switch	Supplies power to LP Valve.	Lower Controls
S14	Starter Switch	Supplies power to starter motor.	Lower Controls
S15	Glow Plug Switch	Supplies power to glow plug relay	Lower Controls
S16	Engine Stop Switch	Cuts power to ignition module and fuel shutoff solenoid.	Lower Controls
S17	Down Switch	Supplies power to down relay	Lower Controls
S18	Lift Switch	Supplies power to up relay	Lower Controls
S19	Throttle Switch	Supplies power to throttle relay	Lower Controls
S20	Emergency Stop Switch	Cuts power to lower controls and engine.	Lower Controls
S21	Chassis/Platform Switch	Supplies power to either upper or lower controls.	Lower Controls
S22,23	Platform Down Switches	High/low speed cutout and outrigger lockout.	Chassis Body
S24	Up Limit Switch	Restricts Lift Cylinder from fully extending.	Chassis Body

DESIG-NATION	NAME	FUNCTION	LOCATION
S25	Axle Float Switch	Supplies power to Axle Float Solenoid	Chassis Body
SOL1	Throttle Solenoid	Controls engine throttle	Power Module
SOL2	LP Shut-off Solenoid	Controls LP Valve	Power Module
SOL3	LP Solenoid	Controls LP Valve	Power Module
SOL4	Gasoline Solenoid	Controls Fuel Valve	Power Module
SOL5	Choke Solenoid	Controls engine choke	Power Module
SOL6	Proportional Solenoid	Controls Proportional Valve	Valve Manifold
SOL7	Forward Solenoid	Controld Forward Valve	Valve Manifold
SOL8	Reverse Solenoid	Controls Reverse Valve	Valve Manifold
SOL9	Up Solenoid	Controls Lift Valve	Valve Manifold
SOL10	Shunt Solenoid	Controls Shunt Valve	Valve Manifold
SOL11	Series/Parallel Solenoid	Controls Series/Parallel Valve	Valve Manifold
SOL12	Axle Float Solenoid	Controls Axle Float Valve	Valve Manifold
SOL13	Down Solenoid	Controls Down Valve	Valve Manifold
SOL14	Steer Right Solenoid	Controls Steer Right Valve	Valve Manifold
SOL15	Steer Left Solenoid	Controls Steer Left Valve	Valve Manifold
SOL16	Down Solenoid	Controls Down Valve	Valve Manifold
SOL17	Series/Parallel Solenoid	Controls Series/Parallel Valve	Valve Manifold
STR	Starter	Starts engine	Power Module

Four Wheel Drive, Dual Fuel
Drawing 1 of 2

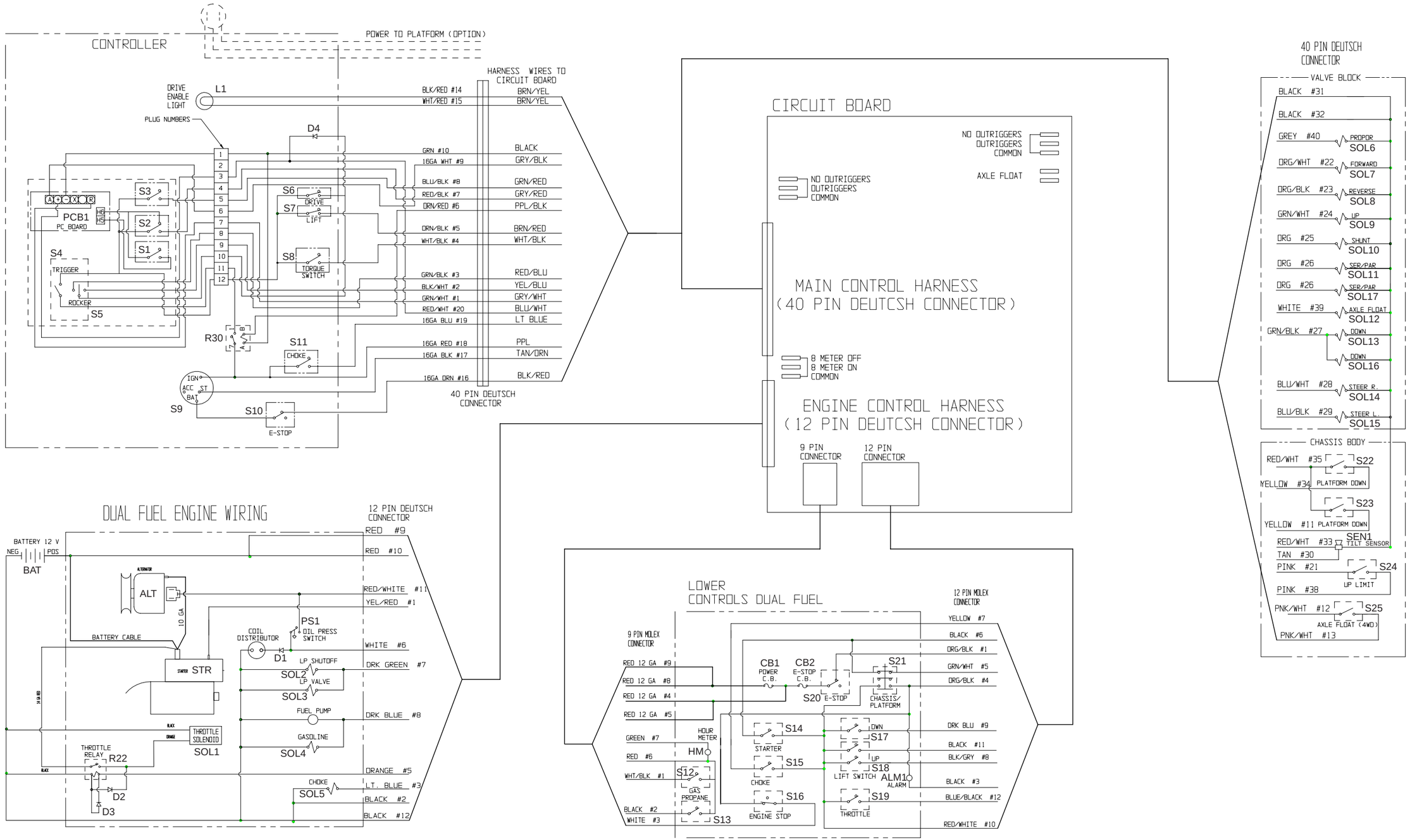

Figure 5-5: Electrical Schematic: Four Wheel Drive, Dual Fuel - 067535-056 (1 of 2)

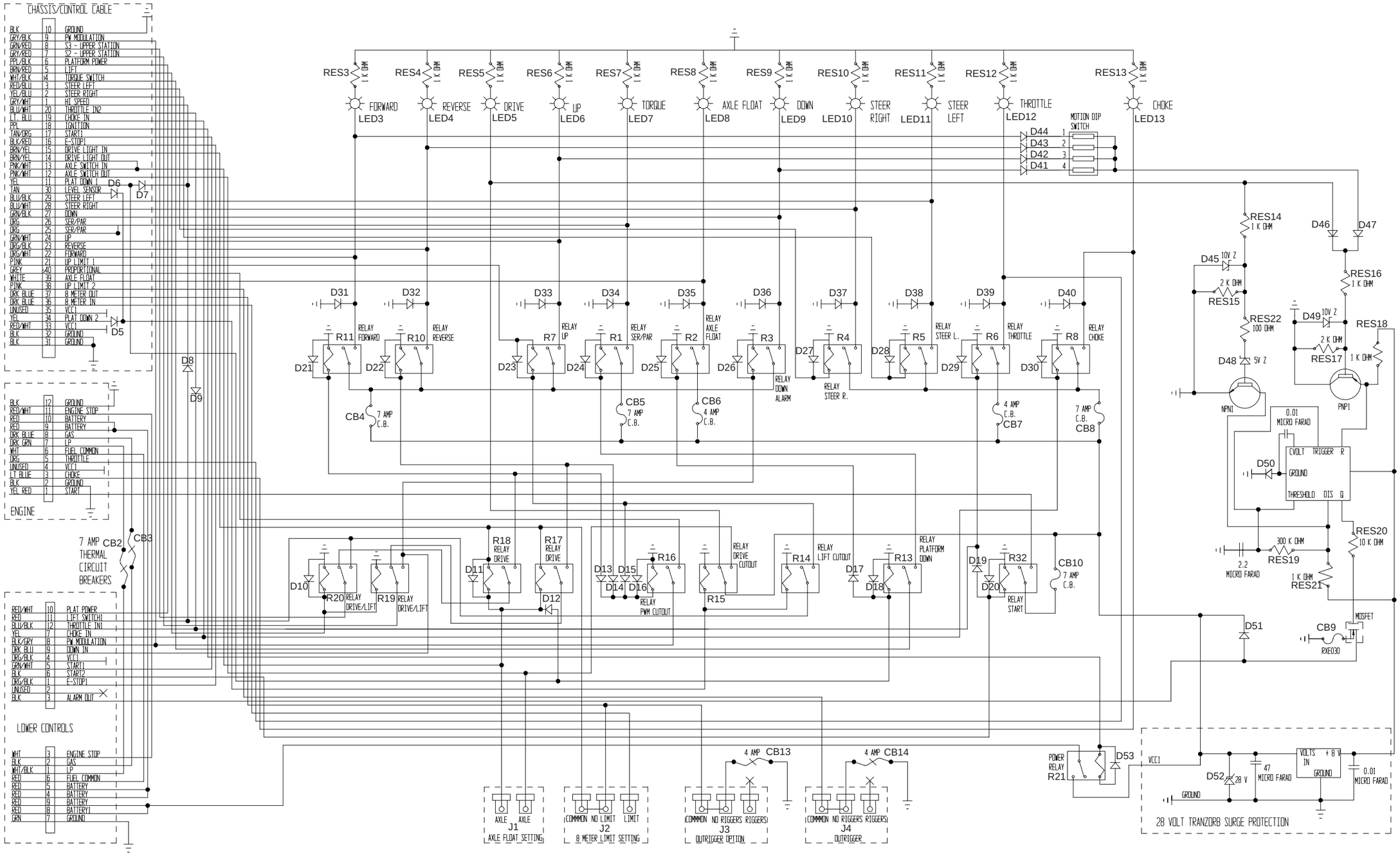

Figure 5-6: Electrical Schematic: Four Wheel Drive, Dual Fuel - 067535-056 (2 of 2)

5.4 ELECTRICAL SCHEMATIC

Table 4: Electrical Schematic Legend: Four Wheel Drive, Diesel Model (067535-057)

DESIG-NATION	NAME	FUNCTION	LOCATION
ALM1	Alarm	Provides warning sound when slope of machine exceeds 3° side-to-side, or fore and aft and also when deck is lowering.	Chassis Body
ALT	Alternator	Maintains current during operation.	Power Module
BAT	Battery	Provides power for starting engine.	Power Module
CB1	Circuit Breaker, Power	Supplies power to all function solenoids.	Lower Controls
CB2	Circuit Breaker, Emergency Stop	Supplies power to Upper Control ignition switch	Lower Controls
CB3	Circuit Breaker	Supplies power to Lower Controls	Power Module
CB4	Circuit Breaker	Supplies power to Relay R11	On Relay R11
CB5	Circuit Breaker	Supplies power to Relay R1	On Relay R1
CB6	Circuit Breaker	Supplies power to Relay R2	On Relay R2
CB7	Circuit Breaker	Supplies power to Relay R6	On Relay R6
CB8	Circuit Breaker	Supplies power to Relay R8	On Relay R8
CB9	Circuit Breaker	Overcurrent protection	Control Module
CB10	Circuit Breaker	Supplies power to relay R32	On Relay R32
CB13	Circuit Breaker	Supplies power to Outrigger option switches S36-38.	On Switch S37
CB14	Circuit Breaker	Supplies power to Outrigger option switches S39-41.	On Switch S40
CB15	Circuit Breaker	Supplies power to Lower Controls	Lower Controls
D1	Diode	Spike Protection	Power Module
D2	Diode	Spike Protection	Power Module
D3	Diode	Spike Protection	Power Module
D4	Diode	Spike Protection	Upper Controls
D5	Diode	Spike Protection	Lower Controls
D6	Diode	Spike Protection	Lower Controls
D7	Diode	Spike Protection	Lower Controls
D8	Diode	Spike Protection	Control Module
D9	Diode	Spike Protection	Control Module
D10	Diode	Spike Protection	On Relay R20
D11	Diode	Spike Protection	On Relay R18
D12	Diode	Spike Protection	On Relay R17
D13-16	Diodes	Spike Protection	On Relay R16
D17	Diode	Spike Protection	
D18	Diode	Spike Protection	On Relay R13
D19	Diode	Spike Protection	
D20	Diode	Spike Protection	On Relay R32
D21	Diode	Spike Protection	On Relay R11
D22	Diode	Spike Protection	On Relay R10
D23	Diode	Spike Protection	On Relay R7
D24	Diode	Spike Protection	On Relay R1
D25	Diode	Spike Protection	On Relay R2
D26	Diode	Spike Protection	On Relay R3

DESIG-NATION	NAME	FUNCTION	LOCATION
D27	Diode	Spike Protection	On Relay R4
D28	Diode	Spike Protection	On Relay R5
D29	Diode	Spike Protection	On Relay R6
D30	Diode	Spike Protection	On Relay R8
D31	Diode	Spike Protection	On Relay R11
D32	Diode	Spike Protection	On Relay R10
D33	Diode	Spike Protection	On Relay R7
D34	Diode	Spike Protection	On Relay R1
D35	Diode	Spike Protection	On Relay R2
D36	Diode	Spike Protection	On Relay R3
D37	Diode	Spike Protection	On Relay R4
D38	Diode	Spike Protection	On Relay R5
D39	Diode	Spike Protection	On Relay R6
D40	Diode	Spike Protection	On Relay R8
D41-44	Diodes	Spike Protection	On Motion Dip Switch
D45	Diode, 10V	Spike Protection	Control Module
D46	Diode	Spike Protection	Control Module
D47	Diode	Spike Protection	Control Module
D48	Diode, 5V	Spike Protection	Control Module
D49	Diode, 10V	Spike Protection	Control Module
D50	Diode	Spike Protection	Control Module
D51	Diode	Spike Protection	Control Module
D52	Diode, 28V	Spike Protection	Control Module
D53	Diode	Spike Protection	On Relay R21
D54	Diode	Spike Protection	On Relay R23
D55	Diode	Spike Protection	On Relay R23
HM	Hour Meter	Counts hours machine is operated	Lower Controls
J1	Axle Float Setting Jumper	Axle Float Settings	Lower Controls
J2	8 Meter Limit Setting Jumper	8 meter cutout settings.	Lower Controls
J3	Outrigger Setting Jumper	Outrigger functions.	Lower Controls
J4	Outrigger Setting Jumper	Outrigger functions.	Lower Controls
L1	Drive Enable LED	Indicates drive enabled	Upper Controls
L3	Forward LED	Indicates Forward functions being used	Circuit Board
L4	Reverse LED	Indicates Reverse functions being used	Circuit Board
L5	Drive LED	Indicates Drive functions being used	Circuit Board
L6	Up LED	Indicates Up functions being used	Circuit Board
L7	Torque LED	Indicates Torque functions being used	Circuit Board
L8	Axle Float LED	Indicates Axle Float functions being used	Circuit Board

DESIG-NATION	NAME	FUNCTION	LOCATION
L9	Down LED	Indicates Down functions being used	Circuit Board
L10	Steer Right LED	Indicates Steer Right functions being used	Circuit Board
L11	Steer Left LED	Indicates Steer Left functions being used	Circuit Board
L12	Throttle LED	Indicates Throttle functions being used	Circuit Board
L13	Choke LED	Indicates Choke functions being used	Circuit Board
PS1	Oil Pressure Switch	Cuts power to engine when oil pressure falls to dangerous levels.	Power Module
R1	Series/Parallel Relay	Switches power to Series/Parallel Solenoids	Control Module
R2	Axle Float Relay	Switches power to Axle Float Solenoid	Control Module
R3	Down Alarm Relay	Switches power to Down Alarm	Control Module
R4	Steer Right Relay	Switches power to Steer Right Solenoid	Control Module
R5	Steer Left Relay	Switches power to Steer Left Solenoid	Control Module
R6	Throttle Relay	Switches power to Throttle Solenoid	Control Module
R7	Up Relay	Switches power to Lift Solenoid	Control Module
R8	Choke Relay	Switches power to Choke Solenoid	Control Module
R10	Reverse Relay	Switches power to Reverse Solenoid	Control Module
R11	Forward Relay	Switches power to Forward Solenoid	Control Module
R13	Platform Down Relay	Cuts power to Series/Parallel Relay when platform is elevated, selecting high torque mode.	Control Module
R14	Lift Cutout Relay	Cuts power to Lift Relay	Control Module
R15	Drive Cutout Relay	Cuts power to Drive and Lift Relays when not energized by level sensor.	Control Module
R16	PWM Cutout	Enables Proportional controls.	Control Module
R17,18	Drive Relays	Cuts power to Forward and Reverse Relays when Cutout Relay is not energized and platform is elevated.	Control Module
R19,20	Drive/Lift Relays	Directs power from Forward and Reverse Switches to either forward/ reverse or up/down relays.	Control Module
R21	Power Relay	Switches power to all Solenoids and engine.	Control Module
R22	Throttle Relay	Switches power to throttle solenoid	Power Module
R23	Glow Plug Relay	Provides power to Glow Plug	Power Module
R30	Upper Control Power Relay	Cuts power to upper controls when lower controls are enabled.	Upper Controls
R32	Start Relay	Provides power to Starter	Control Module
RES1	Glow Plug	Helps start engine when cold	Power Module
RES3	Forward Resistor	Provides power to Forward LED, L3	Circuit Board
RES4	Reverse Resistor	Provides power to Reverse LED, L4	Circuit Board
RES5	Drive Resistor	Provides power to Drive LED, L5	Circuit Board
RES6	Up Resistor	Provides power to Up LED, L6	Circuit Board
RES7	Torque Resistor	Provides power to Torque LED, L7	Circuit Board
RES8	Axle Float Resistor	Provides power to Axle Float LED, L8	Circuit Board

DESIG-NATION	NAME	FUNCTION	LOCATION
RES9	Down Resistor	Provides power to Down LED, L9	Circuit Board
RES10	Steer Right Resistor	Provides power to Steer Right LED, L10	Circuit Board
RES11	Steer Left Resistor	Provides power to Steer Left LED, L11	Circuit Board
RES12	Throttle Resistor	Provides power to Throttle LED, L12	Circuit Board
RES13	Choke Resistor	Provides power to Choke LED, L13	Circuit Board
RES14	Alarm Resistor	Current protection for Alarm	Control Module
RES15	Alarm Resistor	Current protection for Alarm	Control Module
RES16	Alarm Resistor	Current protection for Alarm	Control Module
RES17	Alarm Resistor	Current protection for Alarm	Control Module
RES18	Alarm Resistor	Current protection for Alarm	Control Module
RES19	Alarm Resistor	Current protection for Alarm	Control Module
RES20	Alarm Resistor	Current protection for Alarm	Control Module
RES21	Alarm Resistor	Current protection for Alarm	Control Module
RES22	Alarm Resistor	Current protection for Alarm	Control Module
S1	Micro Switch	Supplies power to controller	Upper Cont., Joystick
S2	Reverse Micro Switch	Supplies power to Drive/Lift Relay, Forward/Up contacts.	Upper Controls, Joystick
S3	Forward Micro Switch	Supplies power to Drive/Lift Relay, Reverse/Down contacts.	Upper Controls, Joystick
S4	Interlock Micro Switch	Interrupts power to controls when not ehgaged.	Upper Controls, joystick handle
S5	Steering Micro Switch	Supplies power to Steer Left and Steer Right Relays.	Upper Controls, joystick handle
S6,7	Drive/Lift Switch	Supplies power to Steering Micro Switch (drive) or to Drive/Lift Relay.	Upper Controls
S8	Torque Switch	Supplies power to Series/Parallel Relay.	Upper Controls
S9	Ignition Switch	Supplies power to upper controls, engine, and starter motor solenoid.	Upper Controls
S10	Emergency Stop Switch	Cuts power to upper controls and engine	Upper Controls
S11	Choke Switch	Supplies power to choke relay	Upper Controls
S14	Starter Switch	Supplies power to starter motor.	Lower Controls
S15	Glow Plug Switch	Supplies power to glow plug relay	Lower Controls
S16	Engine Stop Switch	Cuts power to ignition module and fuel shutoff solenoid.	Lower Controls
S17	Down Switch	Supplies power to Down Relay	Lower Controls
S18	Lift Switch	Supplies power to Up Relay	Lower Controls
S19	Throttle Switch	Supplies power to throttle relay	Lower Controls
S20	Emergency Stop Switch	Cuts power to lower controls and engine.	Lower Controls
S21	Chassis/Platform Switch	Supplies power to either upper or lower controls.	Lower Controls
S22,23	Platform Down Switches	High/low speed cutout and outrigger lockout.	Chassis Body
S24	Up Limit Switch	Restricts Lift Cylinder from fully extending.	Chassis Body

DESIG-NATION	NAME	FUNCTION	LOCATION
S25	Axle Float Switch	Supplies power to Axle Float Solenoid	Chassis Body
SOL1	Throttle Solenoid	Controls engine throttle	Power Module
SOL5	Choke Solenoid	Controls engine choke	Power Module
SOL6	Proportional Solenoid	Controls Proportional Valve	Valve Manifold
SOL7	Forward Solenoid	Controld Forward Valve	Valve Manifold
SOL8	Reverse Solenoid	Controls Reverse Valve	Valve Manifold
SOL9	Up Solenoid	Controls Lift Valve	Valve Manifold
SOL10	Shunt Solenoid	Controls Shunt Valve	Valve Manifold
SOL11	Series/Parallel Solenoid	Controls Series/Parallel Valve	Valve Manifold
SOL12	Axle Float Solenoid	Controls Axle Float Valve	Valve Manifold
SOL13	Down Solenoid	Controls Down Valve	Valve Manifold
SOL14	Steer Right Solenoid	Controls Steer Right Valve	Valve Manifold
SOL15	Steer Left Solenoid	Controls Steer Left Valve	Valve Manifold
SOL16	Down Solenoid	Controls Down Valve	Valve Manifold
SOL17	Series/Parallel Solenoid	Controls Series/Parallel Valve	Valve Manifold
STR	Starter	Starts engine	Power Module

Four Wheel Drive, Diesel
Drawing 1 of 2

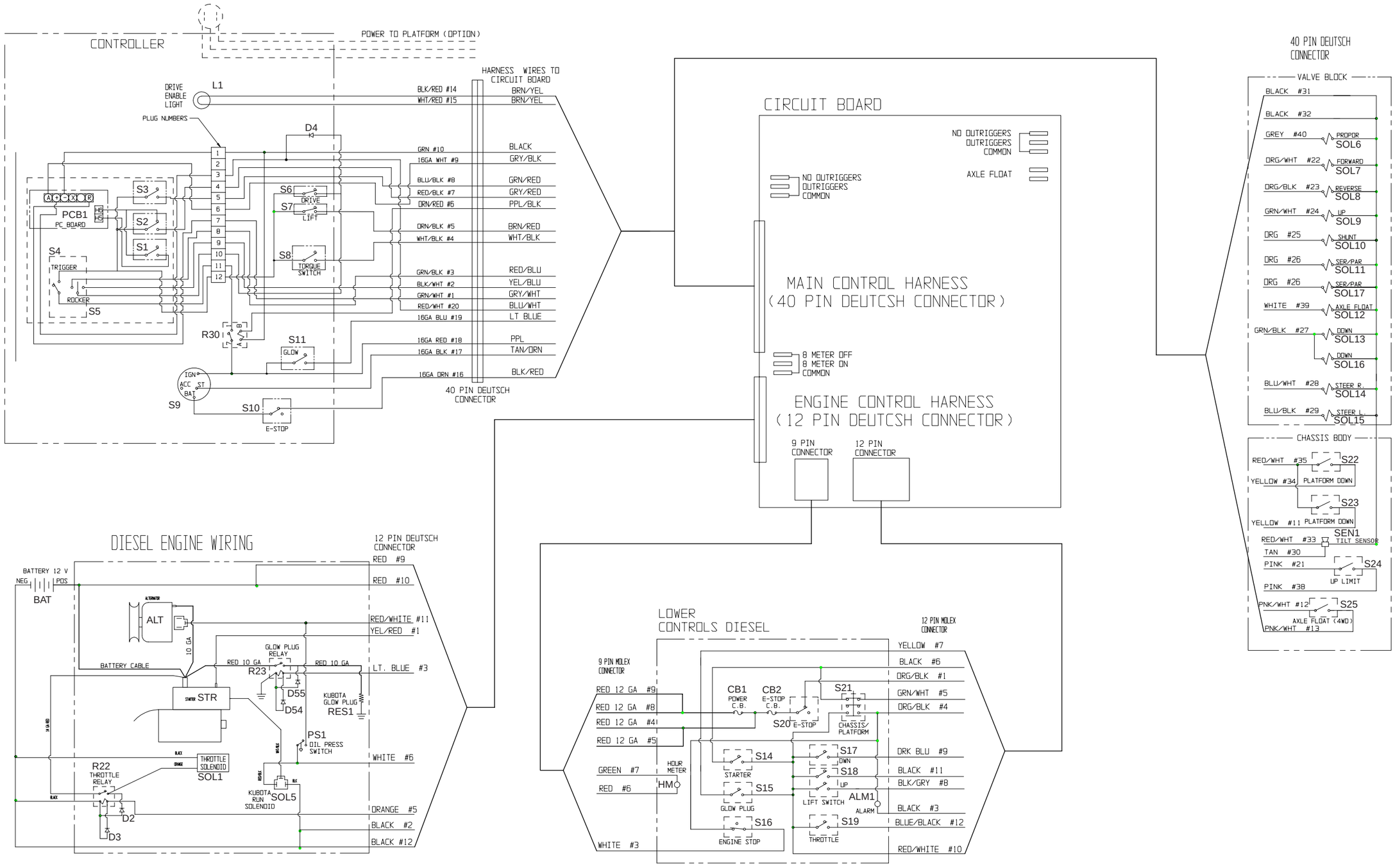

Figure 5-7: Electrical Schematic: Four Wheel Drive, Diesel - 067535-057 (1 of 2)

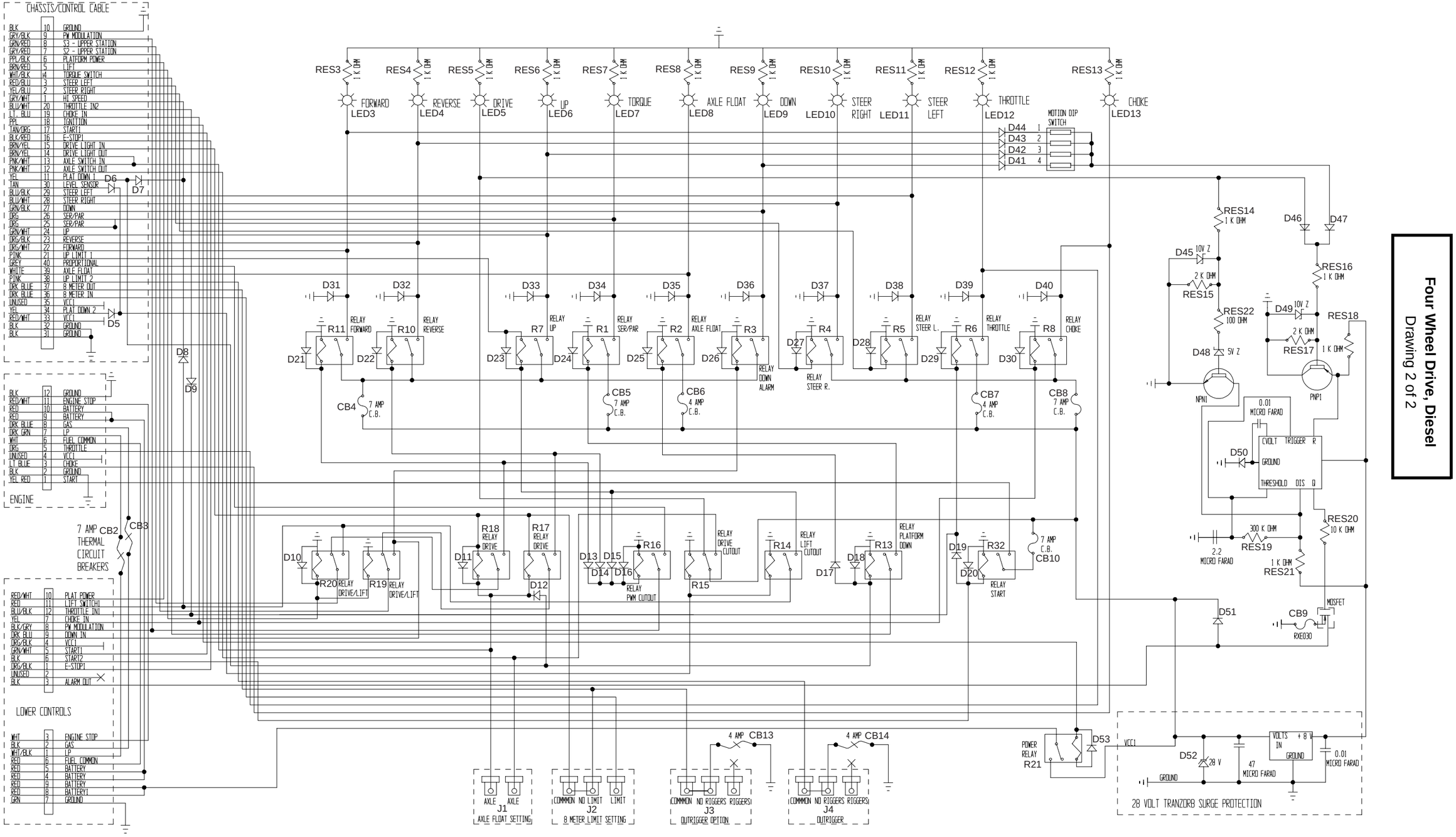

Figure 5-8: Electrical Schematic: Four Wheel Drive, Diesel - 067535-057 (2 of 2)

5.5 ELECTRICAL SCHEMATIC

Table 5: Electrical Schematic Legend: LX50 Outrigger Option)

DESIG-NATION	NAME	FUNCTION	LOCATION
CB11	Circuit Breaker	Supplies power to Override Relays	Circuit Board
D56-75	Diodes	Spike Protection for Outrigger Relays	Circuit Board
J3, J4	Jumpers, Outrigger Settings	Outrigger functions.	Lower Controls
L14	R.H. front Outrigger Extend LED	Indicates Right Hand front Outrigger Extend function in use.	Circuit Board
L15	R.H. front Outrigger Retract LED	Indicates Right Hand front Outrigger Retract function in use.	Circuit Board
L16	L.H. front Outrigger Extend LED	Indicates Left Hand front Outrigger Extend function in use.	Circuit Board
L17	L.H. front Outrigger Retract LED	Indicates Left Hand front Outrigger Retract function in use.	Circuit Board
L18	R.H. rear Outrigger Extend LED	Indicates Right Hand rear Outrigger Extend function in use.	Circuit Board
L19	R.H. front Outrigger Retract LED	Indicates Right Hand Outrigger Retract function in use.	Circuit Board
L20	L.H. rear Outrigger Extend LED	Indicates Left Hand rearOutrigger Extend function in use.	Circuit Board
L21	L.H. rear Outrigger Retract LED	Indicates Left Hand rear Outrigger Retract function in use.	Circuit Board
PS2-5	Outrigger Pressure Switches	Completes ground circuit to Up Relay when Outriggers are loaded	Outrigger Cyliunders
R24	Right-front Outrigger Extend Relay	Switches power to Outrigger Solenoid SOL22.	Circuit Board
R25	Right-front Outrigger Retract Relay	Switches power to Outrigger Solenoid SOL23.	Circuit Board
R26	Left-front Outrigger Extend Relay	Switches power to Outrigger Solenoid SOL20.	Circuit Board
R27	Left-front Outrigger Retract Relay	Switches power to Outrigger Solenoid SOL21.	Circuit Board
R28	Right-rear Outrigger Extend Relay	Switches power to Outrigger Solenoid SOL26.	Circuit Board
R29	Right-rear Outrigger Retract Relay	Switches power to Outrigger Solenoid SOL27.	Circuit Board
R30	Left-rear Outrigger Extend Relay	Switches power to Outrigger Solenoid SOL24.	Circuit Board
R31	Left-rear Outrigger Retract Relay	Switches power to Outrigger Solenoid SOL25.	Circuit Board
R32	Outrigger Power Relay	Supplies Outrigger Extend/Retract Relays with power.	Circuit Board
R33	Pressure Switch Override Relay	Completes ground circuit to Up Relay when Outriggers are retracted	Circuit Board
R34	Override Relay 2		Circuit Board
S27-30	Drive Interlock Switches	Completes ground circuit to Drive relay when all outriggers are retracted	Outrigger Cylinders
S51-54	Outrigger Extend/ Retract Switches	Supplies power to Outrigger Extend/ Retract Relays.	Upper Controls
SOL20	Outrigger Extend Solenoid, LH front	Controls Extend Valve	Outrigger Valve Manifold
SOL21	Outrigger Retract Solenoid, LH front	Controls Retract Valve	Outrigger Valve Manifold
SOL22	Outrigger Extend Solenoid, RH front	Controls Extend Valve	Outrigger Valve Manifold
SOL23	Outrigger Retract Solenoid, RH front	Controls Retract Valve	Outrigger Valve Manifold
SOL24	Outrigger Extend Solenoid, LH rear	Controls Extend Valve	Outrigger Valve Manifold
SOL25	Outrigger Retract Solenoid, LH rear	Controls Retract Valve	Outrigger Valve Manifold
SOL26	Outrigger Extend Solenoid, RH rear	Controls Extend Valve	Outrigger Valve Manifold
SOL27	Outrigger Retract Solenoid, RH rear	Controls Retract Valve	Outrigger Valve Manifold

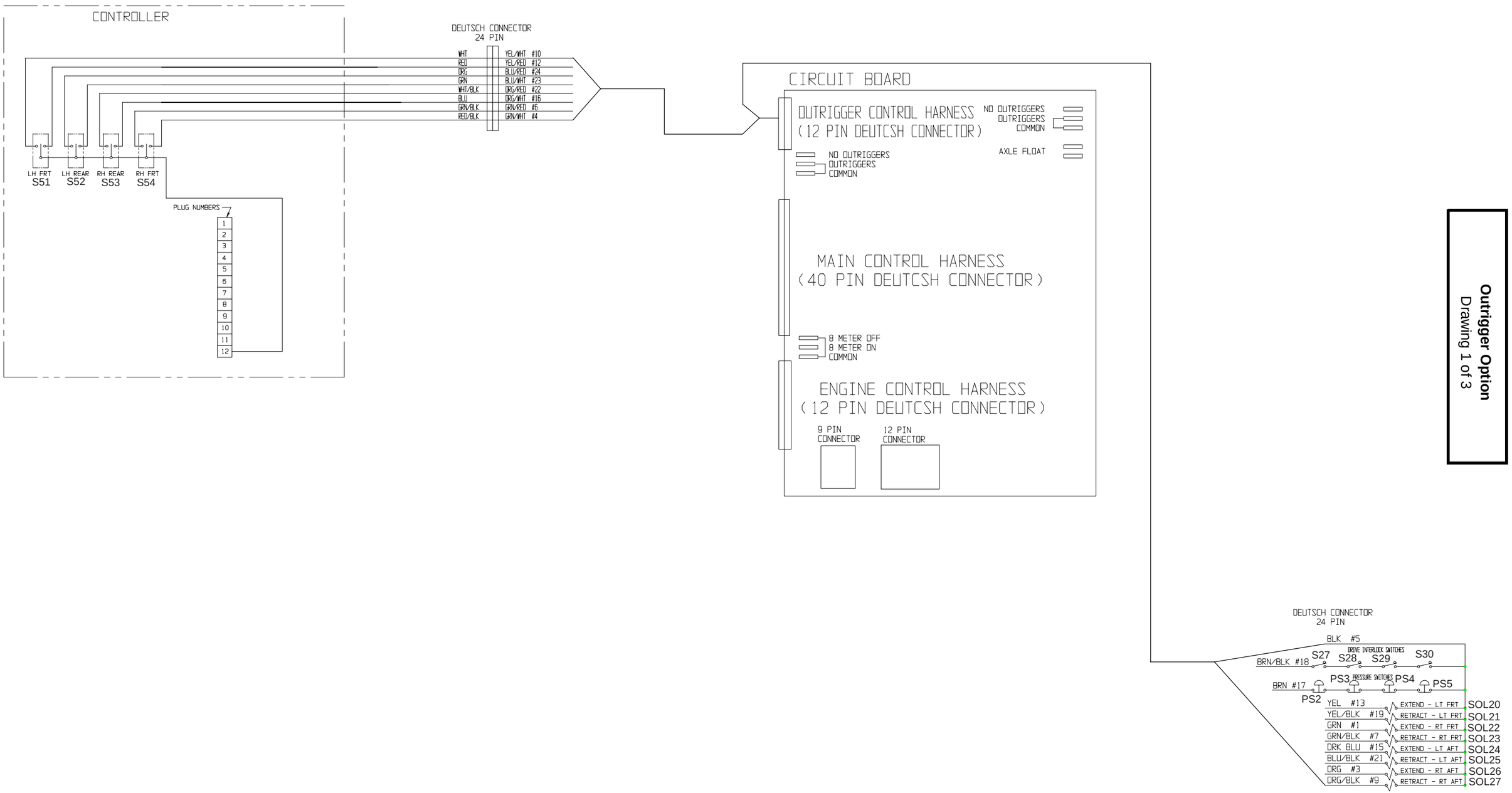

Outrigger Option
Drawing 1 of 3

Figure 5-9: Electrical Schematic: Outrigger Option (1 of 3)

Outrigger Option
Drawing 1 of 3

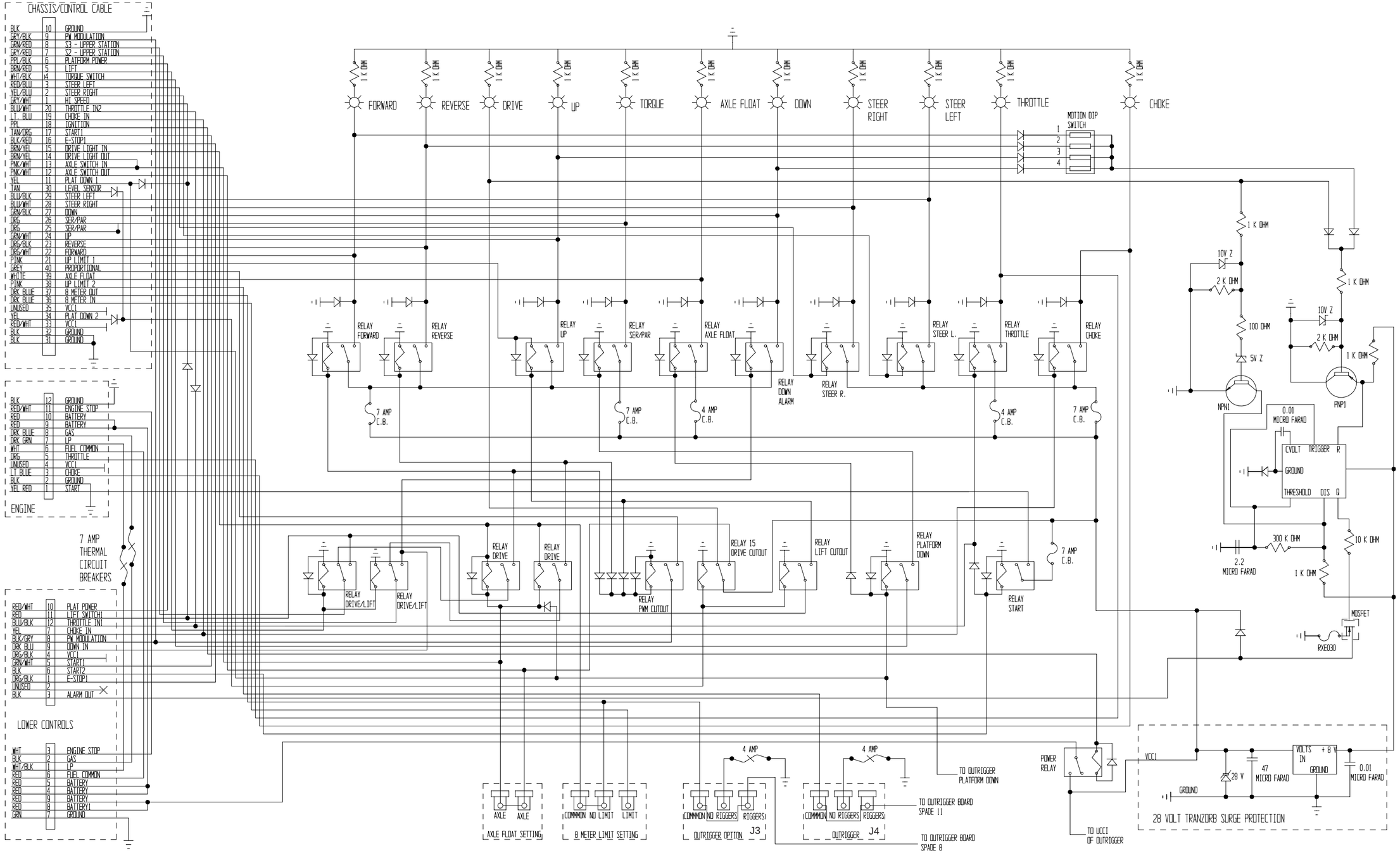

Figure 5-10: Electrical Schematic: Outrigger Option (2 of 3)

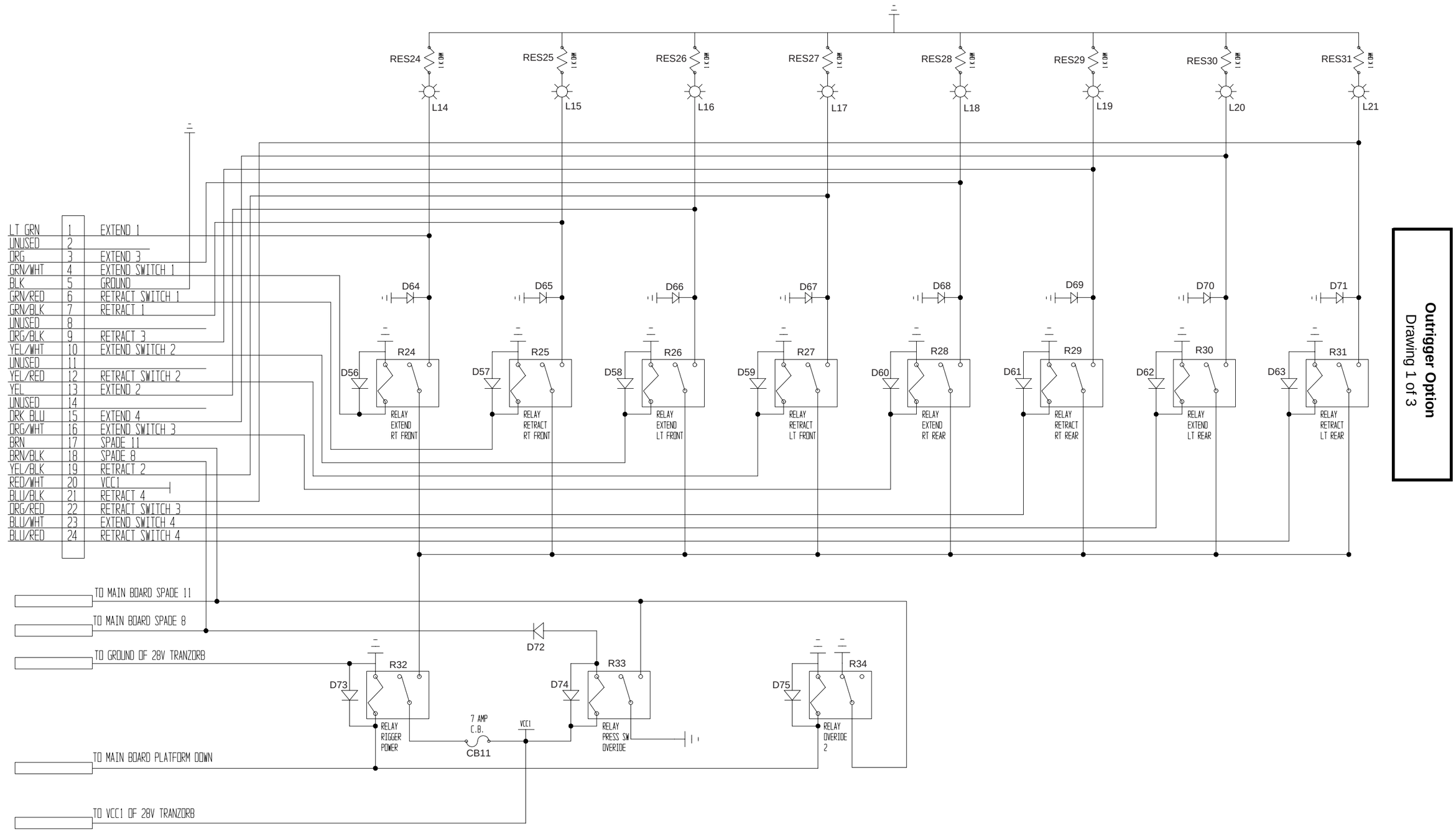

Outrigger Option
Drawing 1 of 3

Figure 5-11: Electrical Schematic: Outrigger Option (3 of 3)

5.6 HYDRAULIC SCHEMATIC

Table 6: Two Wheel Drive Models (067534-014)

REFERENCE DESIGNATION	NAME	FUNCTION	LOCATION
CV1	Check Valve	Allows make-up oil to drive motors	Valve Manifold
CP1	Cavity Plug	Provides logic for two-wheel drive.	Valve Manifold
CP2	Cavity Plug	Used with two-wheel drive axle.	Valve Manifold
CYL1	Steering Cylinder	Actuates steering linkage to steer front wheels.	Front Axle Assembly
CYL2,3	Lift Cylinders	Actuates scissor linkage to elevate platform	Scissor Assembly
CYL4,5	Brake Cylinders	Parking brakes, spring applied, hydraulic release	Rear Axle Assembly
MOT1,2	Rear Drive Motors	Drives rear wheels	Rear Axle Assembly
ORF1	Steering Orifice	Limits the oil flow to the Steering Cylinder	Steering Cylinder
ORF2,3	Down Orifices	Limits the descent speed of the platform	Lift Cylinder
ORF4	Brake Orifice	Allows brakes to release quickly and apply slowly	Valve Manifold
P1	Hydraulic Pump	Provides fluid power for hydraulic power	Power Module
P2	Brake Release Pump	Used to release brakes when machine is towed	Rear Axle Assembly
RV1	Bi-Directional Steering Relief Valve	Provides overpressure protection for steering components	Valve Manifold
RV3	Lift Relief Valve	Limits Maximum load of elevating assembly	Valve Manifold
RV4,5	Bi-Directional Relief Valves	Allows oil flow to bypass drive motors when turning on tight radius	Underneath each rear drive motor
SV1	Sense Line Shuttle Valve	Allows pilot pressure to pump sense line from steering	Steering Cylinder
SV2	Shuttle Valve	Allows for load sense to pump	Valve Manifold
SV3	Drive Shuttle Valve	Allows oil pressure from drive to release brakes	Not Serviceable
SV4	Shuttle Valve	Allows for load sense to pump	Valve Manifold
V1	Steering Valve	Controls oil flow to Steering Cylinder, CYL1	Valve Manifold
V2	Emergency Down Valve	Allows platform to be lowered in the event of system malfunction or power loss.	Rear of Elevating Assembly.
V3	Proportional Valve	Regulates oil flow to lift and drive functions	Valve Manifold
V4	Lift Valve	Allows oil flow to Lift Cylinder, CYL3	Valve Manifold
V5	Forward Valve	Allows oil to flow to drive system in forward, allows return oil flow from drive system in reverse.	Valve Manifold
V6	Reverse Valve	Allows oil to flow to drive system in forward, allows return oil flow from drive system in reverse.	Valve Manifold
V7	Reverse Counter-balance Valve	Provides dynamic braking for machine in forward and prevents runaway on slopes	Valve Manifold
V8	Forward Counter-balance Valve	Provides dynamic braking for machine in reverse and prevents runaway on slopes	Valve Manifold
V9,10	Series/Parallel Valves	Directs oil flow to drive motors in either series (for higher speed) or parallel (for higher torque) configuration	Valve Manifold
V11	Flow Divider Valve	Equalizes oil flow from front and rear drive motors when in parallel configuration	Valve Manifold
V12,13	Down Valves	Holds oil in Lift Cylinder when deck is elevated. Allows oil to flow out of cylinder when deck is lowering. Can be manually actuated for emergency lowering	Base of each Lift Cylinders
V14,15	Velocity Fuse Valves	Protects against uncontrolled descent of platform if hose breaks.	Inside Lift Cylinders

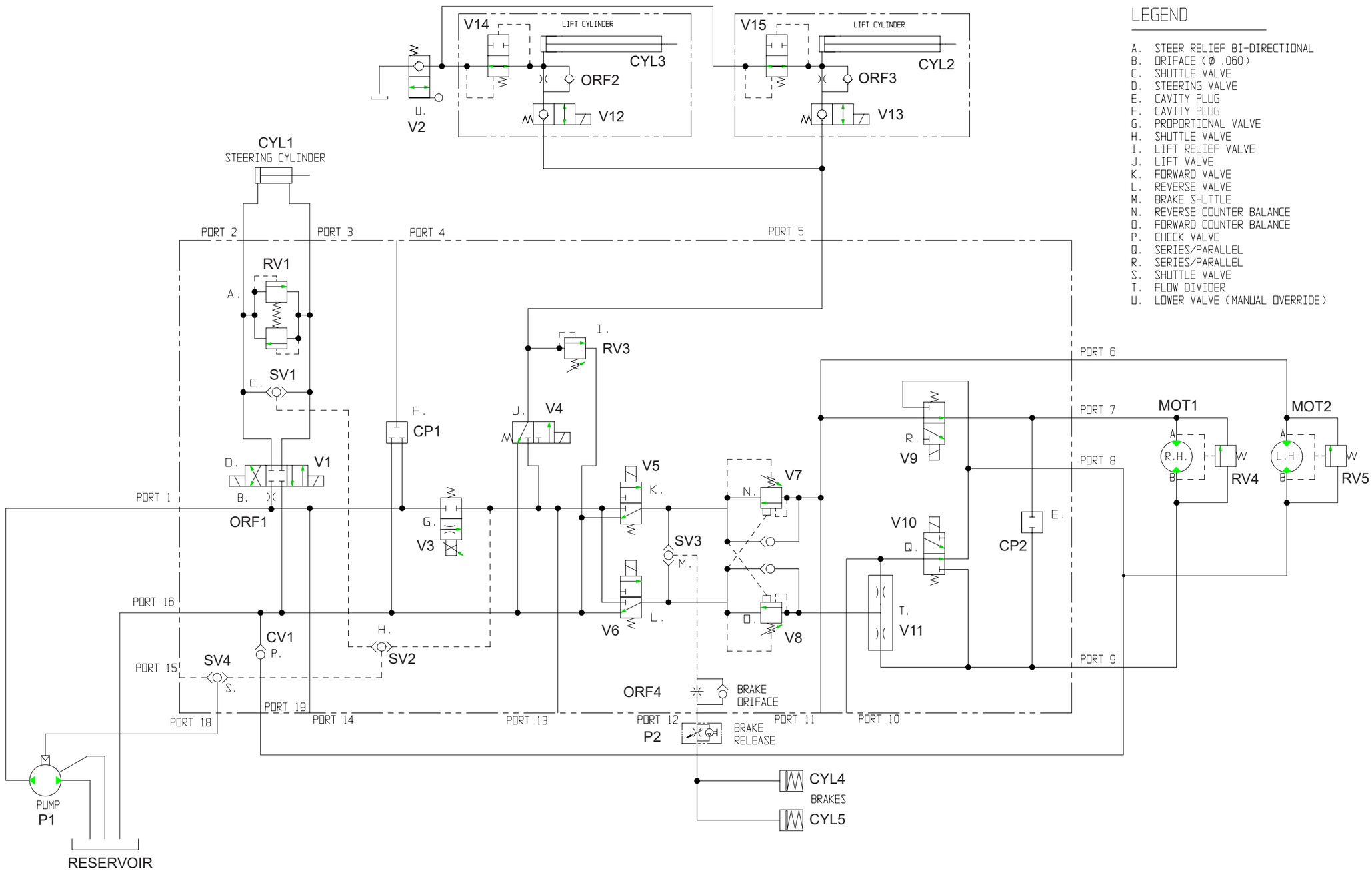

Figure 5-12: Hydraulic Schematic: Two Wheel Drive (067534-014)

5.7 HYDRAULIC SCHEMATIC

Table 7: Four Wheel Drive Models (067534-015)

REFERENCE DESIGNATION	NAME	FUNCTION	LOCATION
CV1	Check Valve	Provides logic for two-wheel drive.	Valve Manifold
CP2	Cavity Plug	Eliminates oil flow to tank.	Valve Manifold
CYL1	Steering Cylinder	Actuates steering linkage to steer front wheels.	Front Axle Assembly
CYL2,3	Lift Cylinders	Actuates scissor linkage to elevate platform	Scissor Assembly
CYL4,5	Brake Cylinders	Parking brakes, spring applied, hydraulic release	Rear Axle Assembly
CYL6	Axle Float Cylinder	Locks front axle when platform is elevated	Front Axle Assembly
MOT1,2	Rear Drive Motors	Drives rear wheels	Rear Axle Assembly
MOT3,4	Front Drive Motors	Drives front wheels	Front Axle Assembly
ORF1	Steering Orifice	Limits the oil flow to the Steering Cylinder	Steering Cylinder
ORF2,3	Down Orifices	Limits the descent speed of the platform	Lift Cylinders
ORF4	Brake Orifice	Allows brakes to release quickly and apply slowly	Valve Manifold
P1	Hydraulic Pump	Provides fluid power for hydraulic power	Power Module
P2	Brake Release Pump	Used to release brakes when machine is towed	Rear Axle Assembly
RV1	Bi-Directional Steering Relief Valve	Provides overpressure protection for steering components	Valve Manifold
RV3	Lift Relief Valve	Limits Maximum load of elevating assembly	Valve Manifold
RV4,5	Bi-Directional Relief Valves	Allows oil flow to bypass drive motors when turning on tight radius	Underneath each rear drive motor
SV1	Sense Line Shuttle Valve	Allows pilot pressure to pump sense line from steering	Steering Cylinder
SV2	Shuttle Valve	Allows for load sense to pump	Valve Manifold
SV3	Drive Shuttle Valve	Allows oil pressure from drive to release brakes	Not Serviceable
SV4	Shuttle Valve	Allows for load sense to pump	Valve Manifold
V1	Steering Valve	Controls oil flow to Steering Cylinder, CYL1	Valve Manifold
V2	Emergency Down Valve	Allows platform to be lowered in the event of system malfunction or power loss.	Rear of Elevating Assembly.
V3	Proportional Valve	Regulates oil flow to lift and drive functions	Valve Manifold
V4	Axle Float Valve	Allows pilot pressure to release check valves on Axle Float Cylinder	Valve Manifold
V5	Forward Valve	Allows oil to flow to drive system in forward, allows return oil flow from drive system in reverse.	Valve Manifold
V6	Reverse Valve	Allows oil to flow to drive system in forward, allows return oil flow from drive system in reverse.	Valve Manifold

REFERENCE DESIGNATION	NAME	FUNCTION	LOCATION
V7	Reverse Counter-balance Valve	Provides dynamic braking for machine in forward and prevents runaway on slopes	Valve Manifold
V8	Forward Counter-balance Valve	Provides dynamic braking for machine in reverse and prevents runaway on slopes	Valve Manifold
V9,10	Series/Parallel Valves	Directs oil flow to drive motors in either series (for higher speed) or parallel (for higher torque) configuration	Valve Manifold
V11	Shunt Valve	Bypasses oil flow from front drive motors when in High Speed Mode, allowing greater pressure from rear motors.	Valve Manifold
V12,13	Down Valves	Holds oil in Lift Cylinder when deck is elevated. Allows oil to flow out of cylinder when deck is lowering. Can be manually actuated for emergency lowering	Base of Lift Cylinders
V14,15	Velocity Fuse Valves	Protects against uncontrolled descent of platform if hose breaks.	Inside Lift Cylinders
V16	Lift Valve	Allows oil flow to Lift Cylinder, CYL3	Valve Manifold

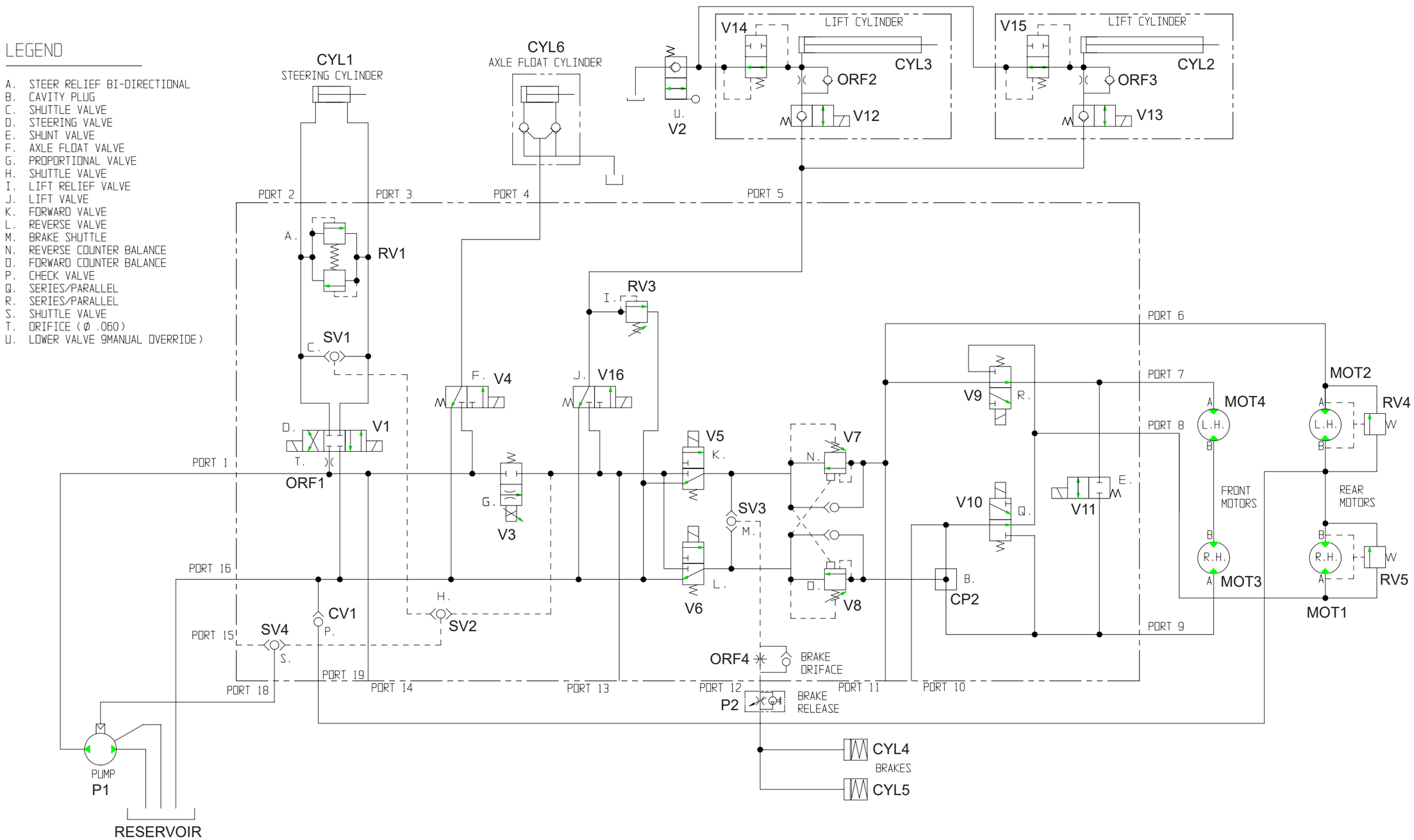

Figure 5-13: Hydraulic Schematic: Four Wheel Drive (067534-015)

5.8 HYDRAULIC SCHEMATIC

Table 8: Two Wheel Drive Models w/Outriggers (067534-016)

REFERENCE DESIGNATION	NAME	FUNCTION	LOCATION
CV1	Check Valve	Allows make-up oil to drive motors.	Valve Manifold
CV3-6	Outrigger Sense line Check Valves	Allows oil to flow to load sense line only	Outrigger Valve Manifold
CP1	Cavity Plug	Provides logic for two-wheel drive.	Valve Manifold
CP2	Cavity Plug	Used with two-wheel drive axle.	Valve Manifold
CYL1	Steering Cylinder	Actuates steering linkage to steer front wheels.	Front Axle Assembly
CYL2,3	Lift Cylinders	Actuates scissor linkage to elevate platform	Scissor Assembly
CYL4,5	Brake Cylinders	Parking brakes, spring applied, hydraulic release	Rear Axle Assembly
CYL6-9	Outrigger Cylinders	Extend and retract to level chassis	Chassis Assembly, aft of each wheel
MOT1,2	Rear Drive Motors	Drives rear wheels	Rear Axle Assembly
ORF1	Steering Orifice	Limits the oil flow to the Steering Cylinder	Steering Cylinder
ORF2,3	Down Orifices	Limits the descent speed of the platform	Lift Cylinder
ORF4	Brake Orifice	Allows brakes to release quickly and apply slowly	Valve Manifold
ORF5	Outrigger Orifice	Limits flow of oil to outriggers	Outrigger Valve Manifold
P1	Hydraulic Pump	Provides fluid power for hydraulic power	Power Module
P2	Brake Release Pump	Used to release brakes when machine is towed	Rear Axle Assembly
RV1	Bi-Directional Steering Relief Valve	Provides overpressure protection for steering components	Valve Manifold
RV3	Lift Relief Valve	Limits Maximum load of elevating assembly	Valve Manifold
RV4,5	Bi-Directional Relief Valves	Allows oil flow to bypass drive motors when turning on tight radius	Underneath each rear drive motor
RV6-13	Outrigger Relief Valves	Provides overpressure protection to outrigger valves	Outrigger Valve Manifold
SV1	Sense Line Shuttle Valve	Allows pilot pressure to pump sense line from steering	Steering Cylinder
SV2	Shuttle Valve	Allows for load sense to pump	Valve Manifold
SV3	Drive Shuttle Valve	Allows oil pressure from drive to release brakes	Not Serviceable
SV4	Shuttle Valve	Allows for load sense to pump	Valve Manifold
V1	Steering Valve	Controls oil flow to Steering Cylinder, CYL1	Valve Manifold
V2	Emergency Down Valve	Allows platform to be lowered in the event of system malfunction or power loss.	Rear of Elevating Assembly.
V3	Proportional Valve	Regulates oil flow to lift and drive functions	Valve Manifold
V4	Lift Valve	Allows oil flow to Lift Cylinder, CYL3	Valve Manifold

REFERENCE DESIGNATION	NAME	FUNCTION	LOCATION
V5	Forward Valve	Allows oil to flow to drive system in forward, allows return oil flow from drive system in reverse.	Valve Manifold
V6	Reverse Valve	Allows oil to flow to drive system in forward, allows return oil flow from drive system in reverse.	Valve Manifold
V7	Reverse Counter-balance Valve	Provides dynamic braking for machine in forward and prevents runaway on slopes	Valve Manifold
V8	Forward Counter-balance Valve	Provides dynamic braking for machine in reverse and prevents runaway on slopes	Valve Manifold
V9,10	Series/Parallel Valves	Directs oil flow to drive motors in either series (for higher speed) or parallel (for higher torque) configuration	Valve Manifold
V11	Flow Divider Valve	Equalizes oil flow from front and rear drive motors when in parallel configuration	Valve Manifold
V12,13	Down Valves	Holds oil in Lift Cylinder when deck is elevated. Allows oil to flow out of cylinder when deck is lowering. Can be manually actuated for emergency lowering	Base of Lift Cylinders
V14,15	Velocity Fuse Valves	Protects against uncontrolled descent of platform if hose breaks.	Inside Lift Cylinders
V19-V22	Outrigger Valves	Operates Outrigger Cylinders	On Outrigger Cylinders

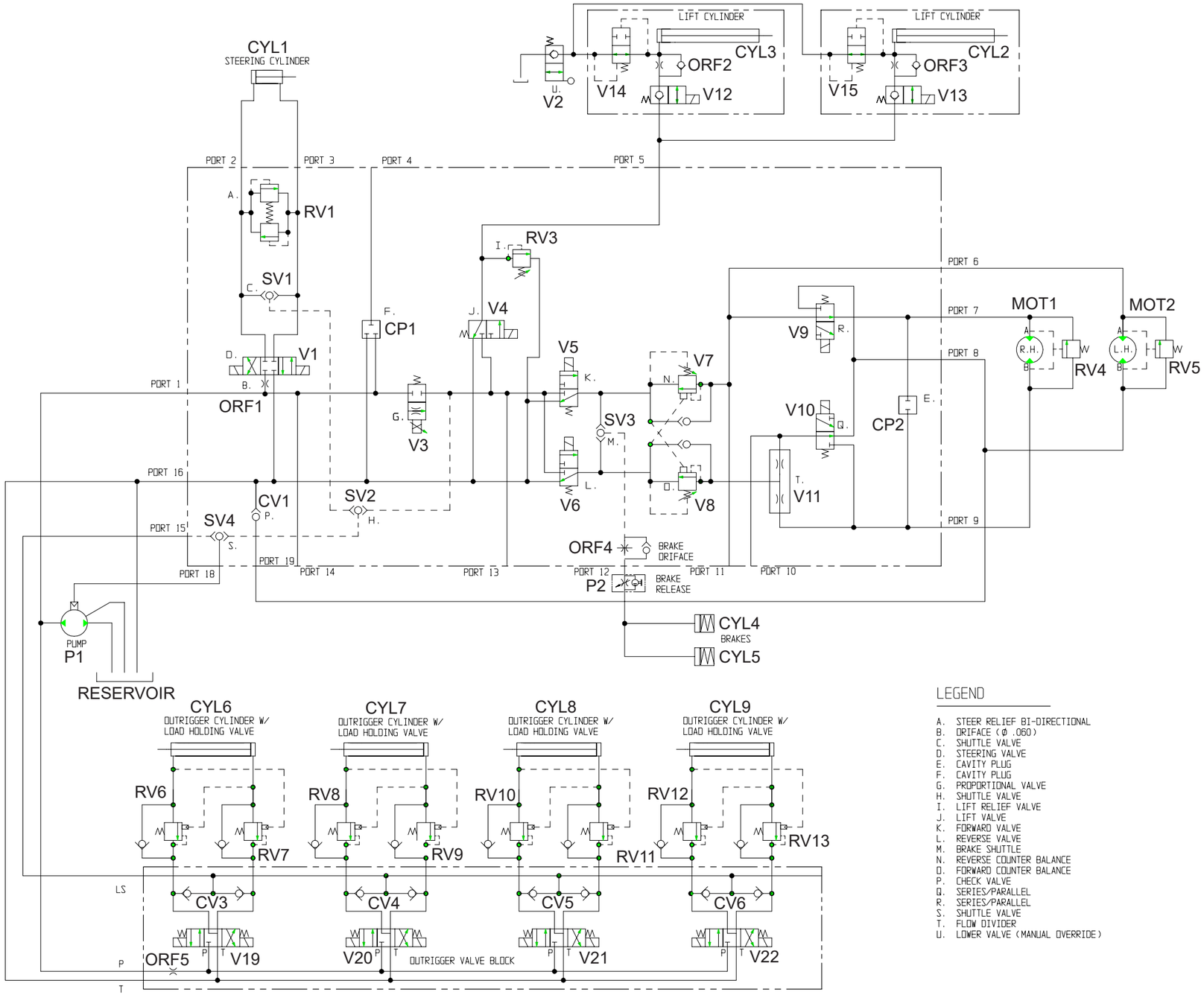

Figure 5-14: Hydraulic Schematic: Two Wheel Drive w/ outriggers (067534-016)

5.9 HYDRAULIC SCHEMATIC

Table 9: Four Wheel Drive Models w/Outriggers (067534-017)

REFERENCE DESIGNATION	NAME	FUNCTION	LOCATION
CV1	Check Valve	Allows make-up oil to drive motors.	Valve Manifold
CV3-6	Outrigger Sense line Check Valves	Allows oil to flow to load sense line only	Outrigger Valve Manifold
CP2	Cavity Plug	Eliminates oil flow to tank.	Valve Manifold
CYL1	Steering Cylinder	Actuates steering linkage to steer front wheels.	Front Axle Assembly
CYL2,3	Lift Cylinders	Actuates scissor linkage to elevate platform	Scissor Assembly
CYL4,5	Brake Cylinders	Parking brakes, spring applied, hydraulic release	Rear Axle Assembly
CYL6-9	Outrigger Cylinders	Extend and retract to level chassis.	
CYL10	Axle Float Cylinder	Locks front axle when platform is elevated	Front Axle Assembly
MOT1,2	Rear Drive Motors	Drives rear wheels	Rear Axle Assembly
MOT3,4	Front Drive Motors	Drives front wheels	Front Axle Assembly
ORF1	Steering Orifice	Limits the oil flow to the Steering Cylinder	Steering Cylinder
ORF2,3	Down Orifice	Limits the descent speed of the platform	Lift Cylinder
ORF4	Brake Orifice	Allows brakes to release quickly and apply slowly	Valve Manifold
ORF5	Outrigger Orifice	Limits flow of oil to outriggers	Outrigger Valve Manifold
P1	Hydraulic Pump	Provides fluid power for hydraulic power	Power Module
P2	Brake Release Pump	Used to release brakes when machine is towed	Rear Axle Assembly
RV1	Bi-Directional Steering Relief Valve	Provides overpressure protection for steering components	Valve Manifold
RV3	Lift Relief Valve	Limits Maximum load of elevating assembly	Valve Manifold
RV4,5	Bi-Directional Relief Valves	Allows oil flow to bypass drive motors when turning on tight radius	Underneath each rear drive motor
RV6-13	Outrigger Relief Valves	Provides overpressure protection to outrigger valves.	Outrigger Valve Manifold
SV1	Sense Line Shuttle Valve	Allows pilot pressure to pump sense line from steering	Steering Cylinder
SV2	Shuttle Valve	Allows for load sense to pump	Valve Manifold
SV3	Drive Shuttle Valve	Allows oil pressure from drive to release brakes	Not Serviceable
SV4	Shuttle Valve	Allows for load sense to pump	Valve Manifold
V1	Steering Valve	Controls oil flow to Steering Cylinder, CYL1	Valve Manifold
V2	Emergency Down Valve	Allows platform to be lowered in the event of system malfunction or power loss.	Rear of Elevating Assembly.
V3	Proportional Valve	Regulates oil flow to lift and drive functions	Valve Manifold
V4	Lift Valve	Allows oil flow to Lift Cylinder, CYL3	Valve Manifold

REFERENCE DESIGNATION	NAME	FUNCTION	LOCATION
V5	Forward Valve	Allows oil to flow to drive system in forward, allows return oil flow from drive system in reverse.	Valve Manifold
V6	Reverse Valve	Allows oil to flow to drive system in forward, allows return oil flow from drive system in reverse.	Valve Manifold
V7	Reverse Counter-balance Valve	Provides dynamic braking for machine in forward and prevents runaway on slopes	Valve Manifold
V8	Forward Counter-balance Valve	Provides dynamic braking for machine in reverse and prevents runaway on slopes	Valve Manifold
V9,10	Series/Parallel Valves	Directs oil flow to drive motors in either series (for higher speed) or parallel (for higher torque) configuration	Valve Manifold
V11	Shunt Valve	Bypasses oil flow from front drive motors when in High Speed Mode, allowing greater pressure from rear motors.	Valve Manifold
V12,13	Down Valves	Holds oil in Lift Cylinder when deck is elevated. Allows oil to flow out of cylinder when deck is lowering. Can be manually actuated for emergency lowering	Base of Lift Cylinder
V14,15	Velocity Fuse Valves	Protects against uncontrolled descent of platform if hose breaks.	Inside Lift Cylinders
V19-V22	Outrigger Valves	Operates Outrigger Cylinders	On Outrigger Cylinders
V23	Axle Float Valve	Allows pilot pressure to release check valves on Axle Float Cylinder	Valve Manifold

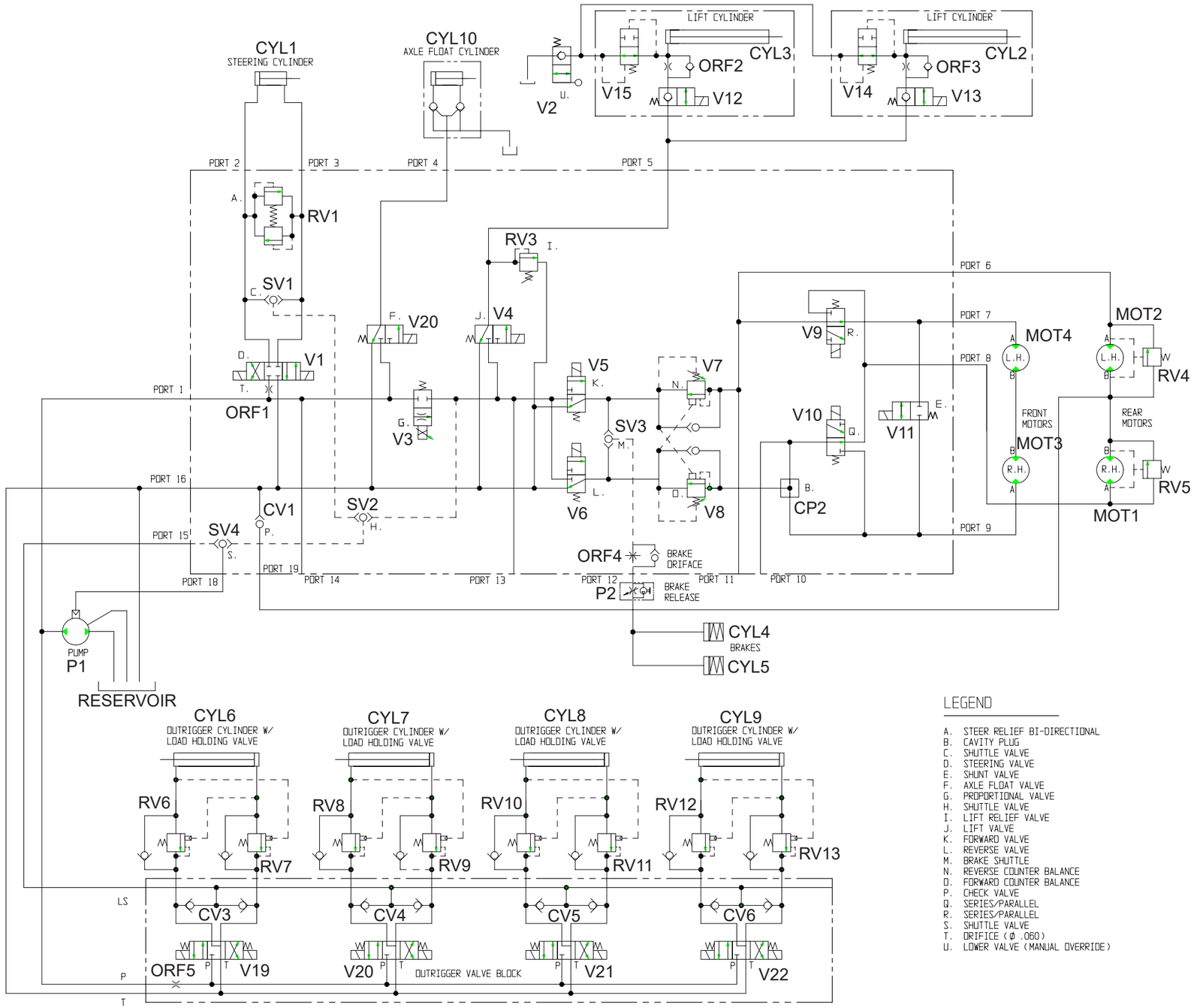

Figure 5-15: Hydraulic Schematic: Four Wheel Drive w/ outriggers (067534-017)

Notes:

Section 6

ILLUSTRATED PARTS BREAKDOWN

Introduction

This section lists and illustrates the replaceable assemblies and parts of this product, as manufactured by UpRight, Inc. Each parts list contains the component parts for that assembly.

CONTENTS

NOTES:

FINAL ASSEMBLY, LX50 TWO-WHEEL DRIVE DUAL FUEL, STANDARD DECK

067546-010

ITEM	PART NO.	DESCRIPTION	QTY.
1	067508-001	BASIC ASSY	1
2	067528-010	CONTROLLER ASSY	1
3	067536-012	CONTROL CABLE ASSY	1
4	067532-180	LABEL-KIT	1
5	067533-022	HOSE-KIT	1
6	067530-005	GUARDRAIL	1
7	067522-010	POWER MODULE ASSEMBLY	1
8	067521-020	CONTROL MODULE ASSEMBLY	1
9	067534-014	HYDRAULIC SCHEMATIC	REF
10	067535-054	ELECTRICAL SCHEMATIC	REF
11	067692-000	CLIP, CABLE RETAINER	4
14	029945-013	LEVEL SENSOR	1
15	011252-006	SCRW, 1/4-20 X 3/4	4
16	011248-004	LOCKNUT, 1/4-20 UNC	8
17	065373-005	MAGNET	2

ITEM	PART NO.	DESCRIPTION	QTY.
18	065373-006	SWITCH	2
19	067913-000	ALUM. SW. PAD	1
20	026551-005	RIVET 1/8 X 1/4 GRIP	8
21	029490-099	CABLE, 2 COND. 16 AWG	30 FT
22	029620-002	CONN. BUTT 16-14 AWG	12
23	063497-001	MERCURY SWITCH	1
24	013919-013	CLAMP	1
25	014996-004	WASHER, 1/4 SAE FLAT	4
26	067492-003	WIRE HARNESS, ENGINE EXTENSION	1
27	013283-002	CABLE MOUNT	4
28	020398-012	CLAMP, CUSHIONED, Ø 1 1/2	4
29	012865-099	WIRE LOOM 3/4 DIA	8 FT
30	067863-000	SWITCH MOUNT	1
31	067758-099	NYLON HOSE GUARD	3 FT
32	029931-003	CONN. FEMALE PUSH, 16-14 GA., .25 TAB	2

NOTES:

1. HYDRAULIC PRESSURE SETTING
   FORWARD COUNTER BALANCE - 800 PSI
   REVERSE COUNTER BALANCE - 800 PSI
   DRIVE MOTOR RELIEF - 3000 PSI
   STEERING - 1500 PSI

2. ENGINE SPEED
   FULL THROTTLE - 3400 ±50 RPM
   IDLE SPEED - 1350 ±50 RPM

3. DRIVE SPEED
   SLOW - .30-.35 MPH (38-45 SEC. @ 20 FT.)
   HIGH - 2.9-3.1 MPH (4.4-4.7 SEC. @ 20 FT.)

4. LIFT SPEED
   UP - 80 SECONDS DOWN - 75 SECONDS

5. PROOF LOAD - 1500 LBS.

6. RATED LOAD - 1000 LBS./455 KG.

7. GRADABILITY 24% MIN. (2900 LBS. DRAWBAR PULL)

8. CAUTION:
   MAKE SURE THAT PUMP IS FILLED WITH HYDRAULIC OIL PRIOR TO OPERATION, OR SERIOUS DAMAGE WILL OCCUR.

9. CHECK TIRE PRESSURE (10-16.5 NHS 8 PLY) @ 50 PSI

10.

11. SET MERCURY SWITCH (UP LIMIT) TO OPEN AT SPECIFIED DIMENSION TO PREVENT FULL EXTENSION OF LIFT CYL.

12. SET SWITCH TO OPEN LESS THAN 2 FT. PLATFORM LIFT.

13. BLEED AIR OUT OF BRAKES.

Illustrated Parts Breakdown

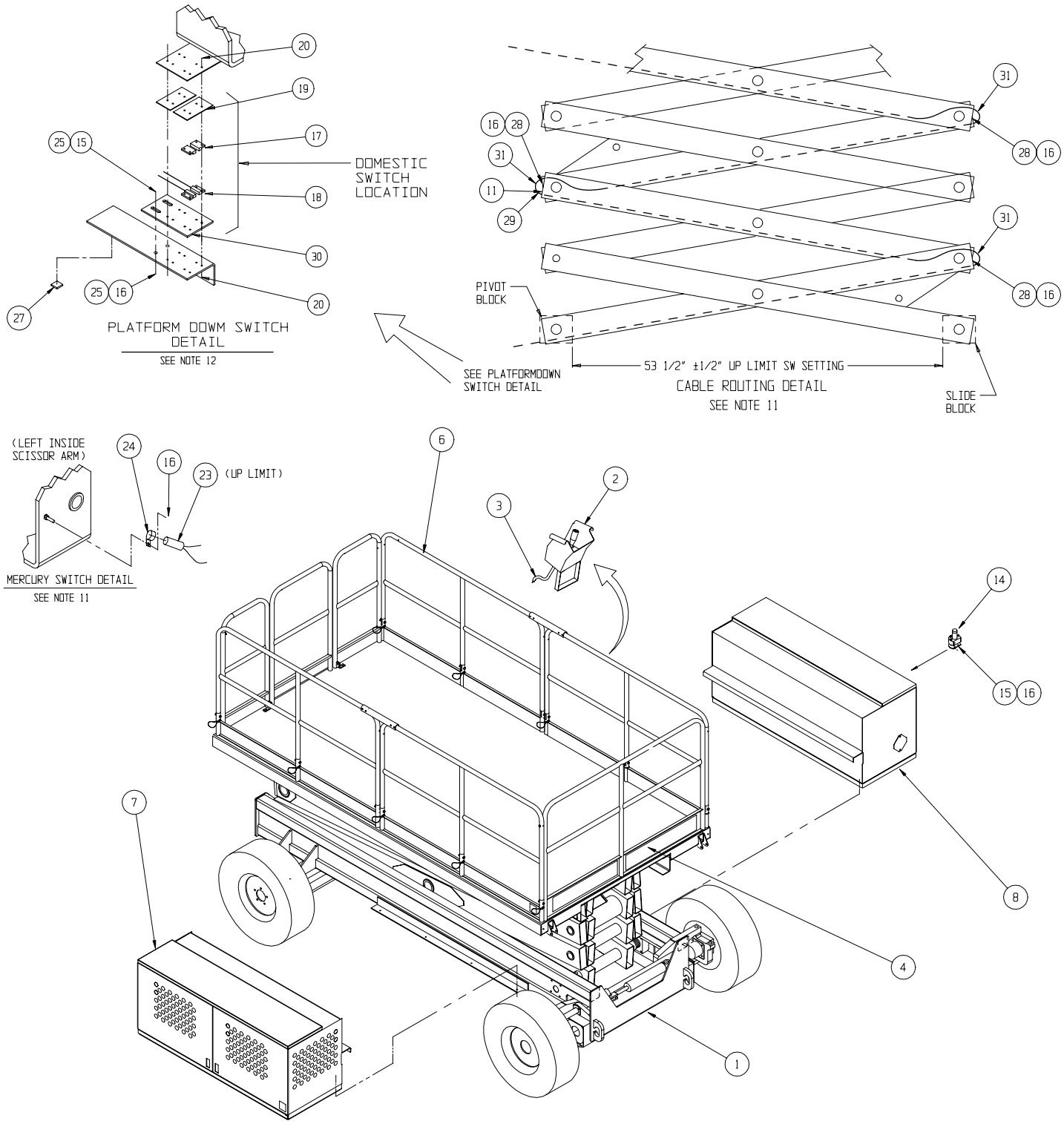

Final Assembly, LX50

Drawing 1 of 3

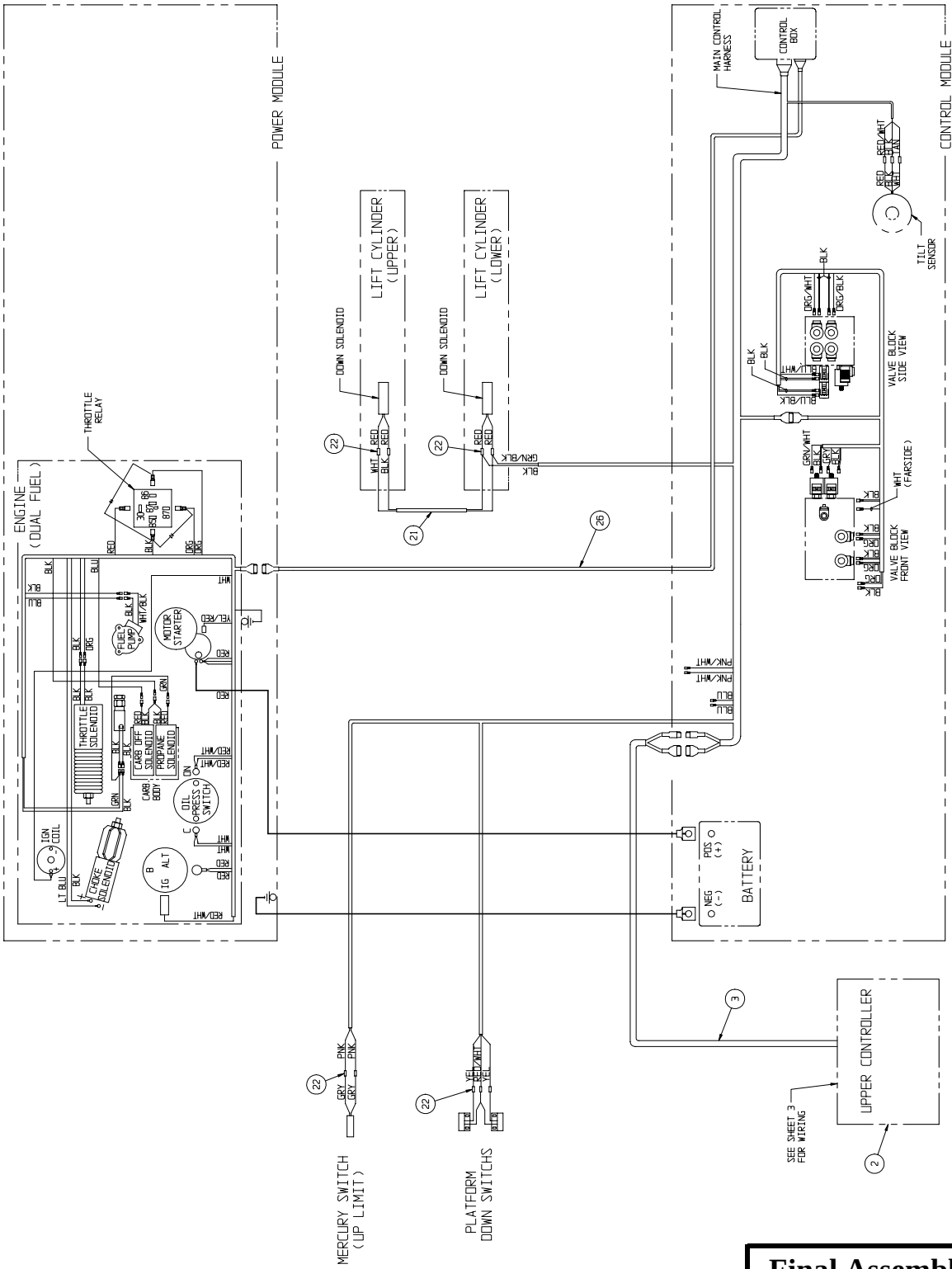

Final Assembly, LX50

Drawing 2 of 3

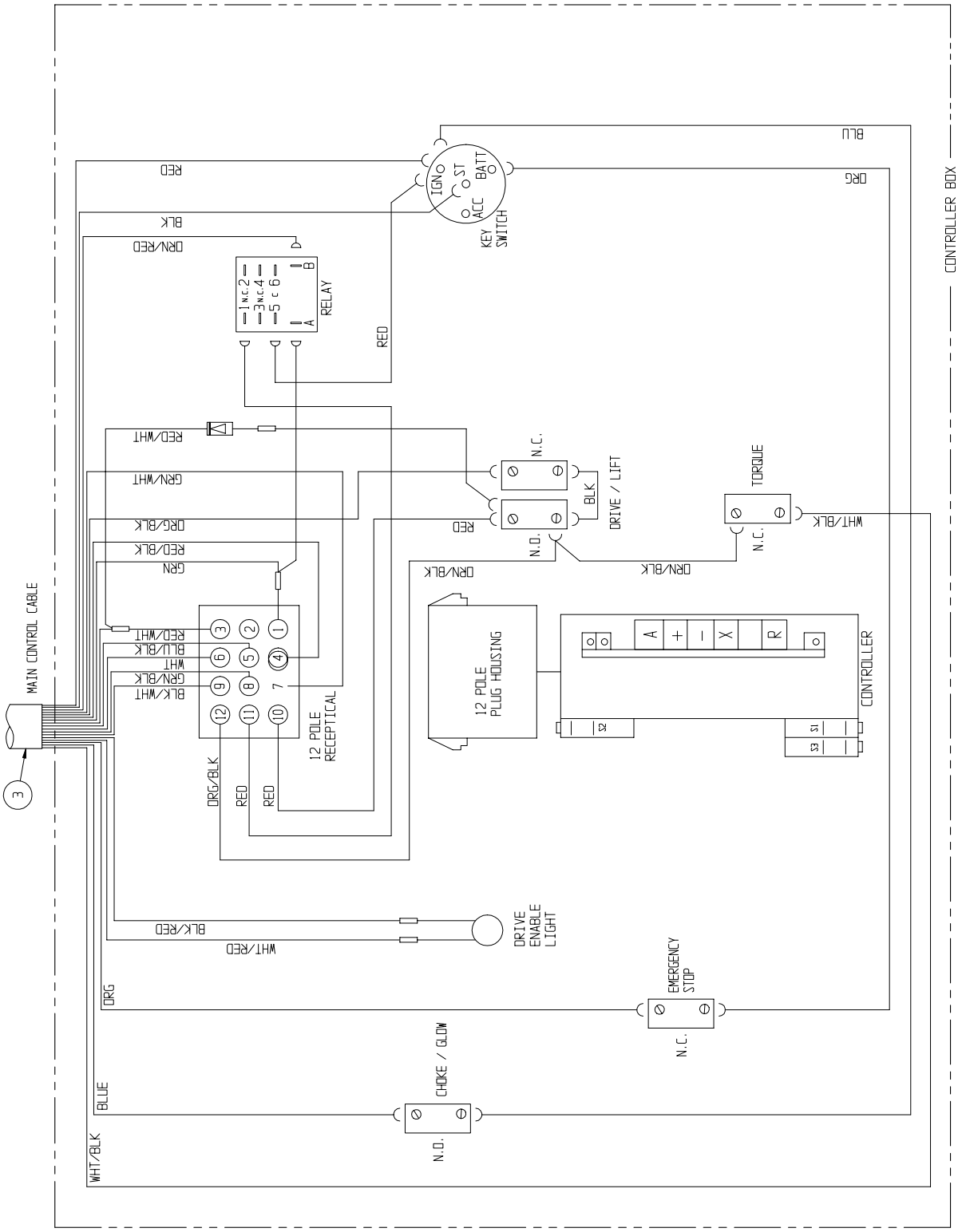

Final Assembly, LX50

Drawing 2 of 3

FINAL ASSEMBLY, LX50 TWO-WHEEL DRIVE DIESEL, STANDARD DECK

067547-010

ITEM	PART NO.	DESCRIPTION	QTY.
1	067508-001	BASIC ASSY	1
2	067528-010	CONTROLLER ASSEMBLY	1
3	067536-012	CONTROL CABLE ASSEMBLY	1
4	067532-181	LABEL-KIT (DOM)	1
5	067533-022	HOSE-KIT	1
6	067530-005	GUARDRAIL	1
7	067522-012	POWER MODULE ASSEMBLY	1
8	067521-021	CONTROL MODULE ASSEMBLY	1
9	067534-014	HYDRAULIC SCHEMATIC	REF
10	067535-055	ELECTRICAL SCHEMATIC (DOM)	REF
12	029945-013	LEVEL SENSOR	1
13	011252-006	SCRW, 1/4-20 X 3/4	4
14	011248-004	LOCKNUT, 1/4-20 UNC	8
15	065373-005	MAGNET	2
16	065373-006	SWITCH	2

ITEM	PART NO.	DESCRIPTION	QTY.
17	067913-000	ALUM. SW. PAD	1
18	026551-005	RIVET 1/8 X 1/4 GRIP	8
20	029620-002	CONN. BUTT 16-14 GA.	12
21	063497-001	MERCURY SWITCH	1
22	013919-013	CLAMP	1
23	014996-004	WASHER, 1/4 SAE FLAT	4
24	020398-012	CLAMP, CUSHIONED, Ø 1 1/2	4
25	013283-002	CABLE MOUNT	4
26	029490-099	CABLE 2 COND. 16 GA.	30 FT
27	012865-099	WIRE LOOM 3/4 DIA	8
28	067863-000	SWITCH MOUNT	1
31	067492-003	WIRE HARNESS, ENGINE EXTENSION	1
33	067758-099	NYLON HOSE GUARD	8 FT
34	067692-000	CLIP, CABLE RETAINER	4

NOTES:

1. HYDRAULIC PRESSURE SETTING
   FORWARD COUNTER BALANCE - 800 PSI
   REVERSE COUNTER BALANCE - 800 PSI
   DRIVE MOTOR RELIEF - 3000 PSI
   STEERING - 1500 PSI
2. ENGINE SPEED
   FULL THROTTLE - 3000 ±50 RPM
   IDLE SPEED - 1350 ±50 RPM
3. DRIVE SPEED
   SLOW - .30-.35 MPH (38-45 SEC. @ 20 FT.)
   HIGH - 2.9-3.1 MPH (4.4-4.7 SEC. @ 20 FT.)
4. LIFT SPEED
   UP - 80 SECONDS DOWN - 75 SECONDS
5. PROOF LOAD - 1500 LBS.
6. RATED LOAD - 1000 LBS./455 KG.
7. GRADABILITY 24% MIN. (2900 LBS. DRAWBAR PULL)
8. CAUTION:
   MAKE SURE THAT PUMP IS FILLED WITH HYDRAULIC OIL PRIOR TO OPERATION, OR SERIOUS DAMAGE WILL OCCUR.
9. CHECK TIRE PRESSURE (10-16.5 NHS 8 PLY) @ 50 PSI
10. SET MERCURY SWITCH (DRIVE CUT-OUT) TO OPEN @ 8 METERS (26'-3") PLATFORM HEIGHT.
11. SET MERCURY SWITCH (UP LIMIT) TO OPEN AT SPECIFIED DIMENSION TO PREVENT FULL EXTENSION OF LIFT CYL.
12. SWITCH TO OPEN LESS THAN 2 FT. PLATFORM LIFT.
13. BLEED AIR OUT OF BRAKES.

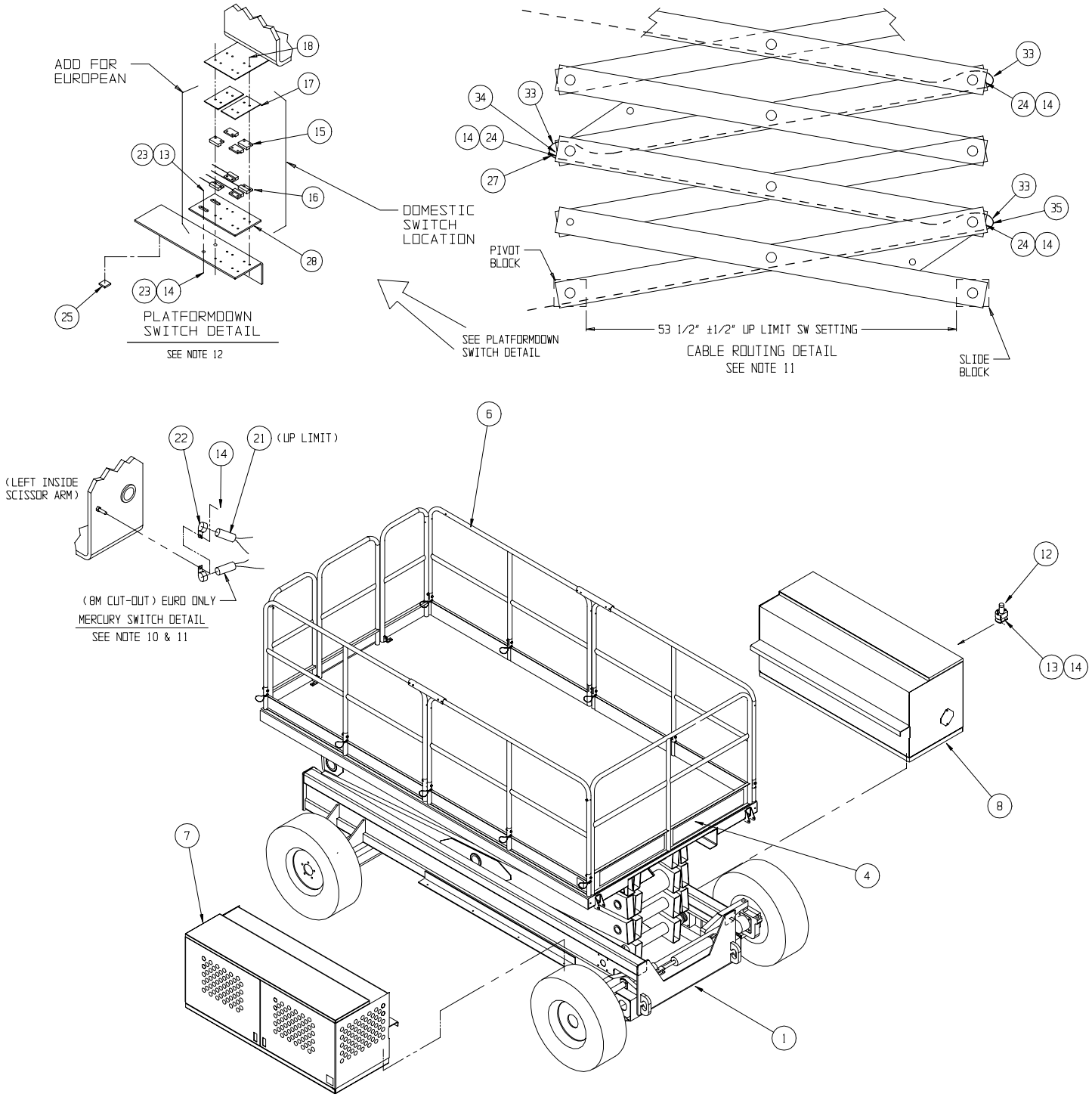

Final Assembly, LX50

Drawing 1 of 3

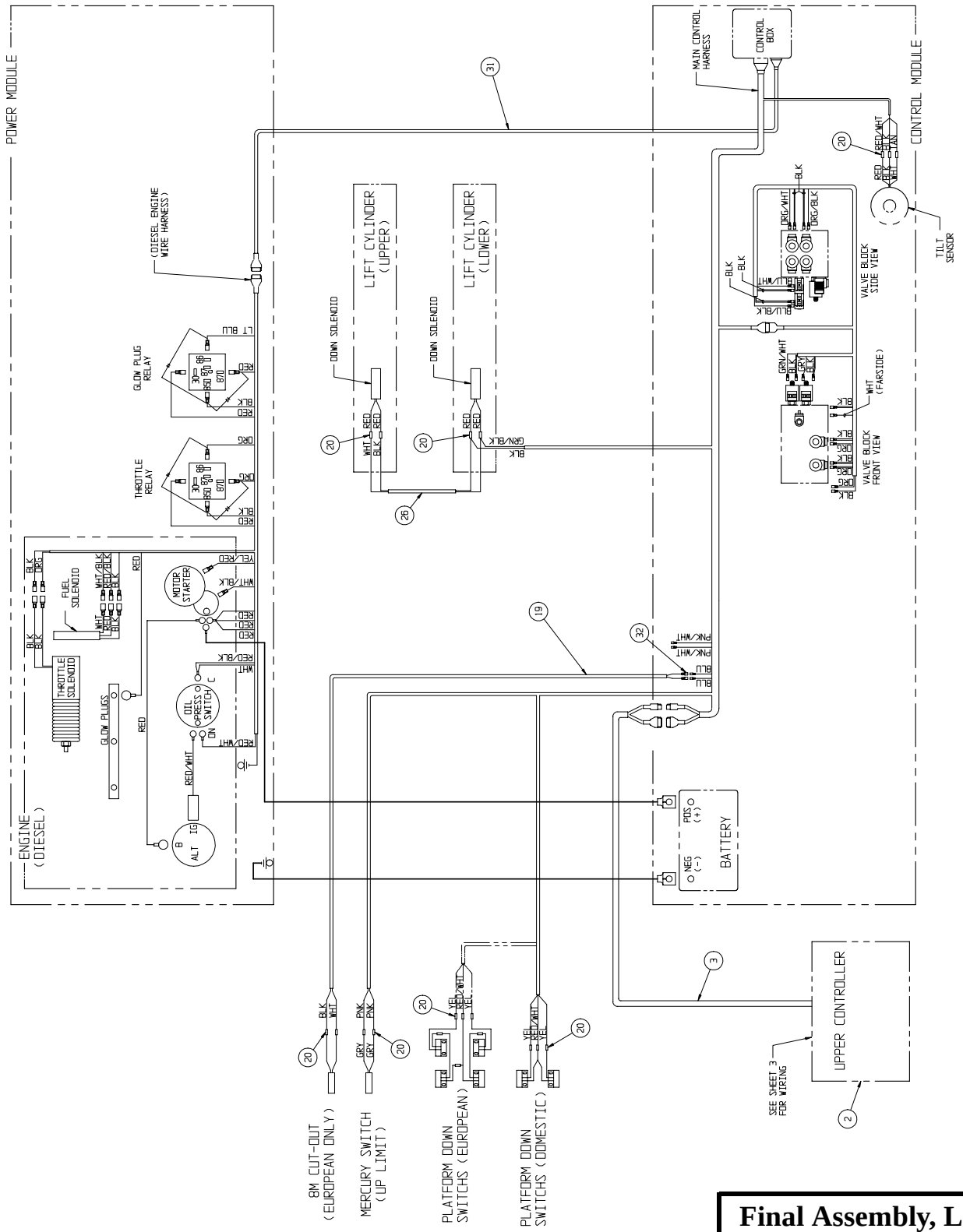

Final Assembly, LX50

Drawing 2 of 3

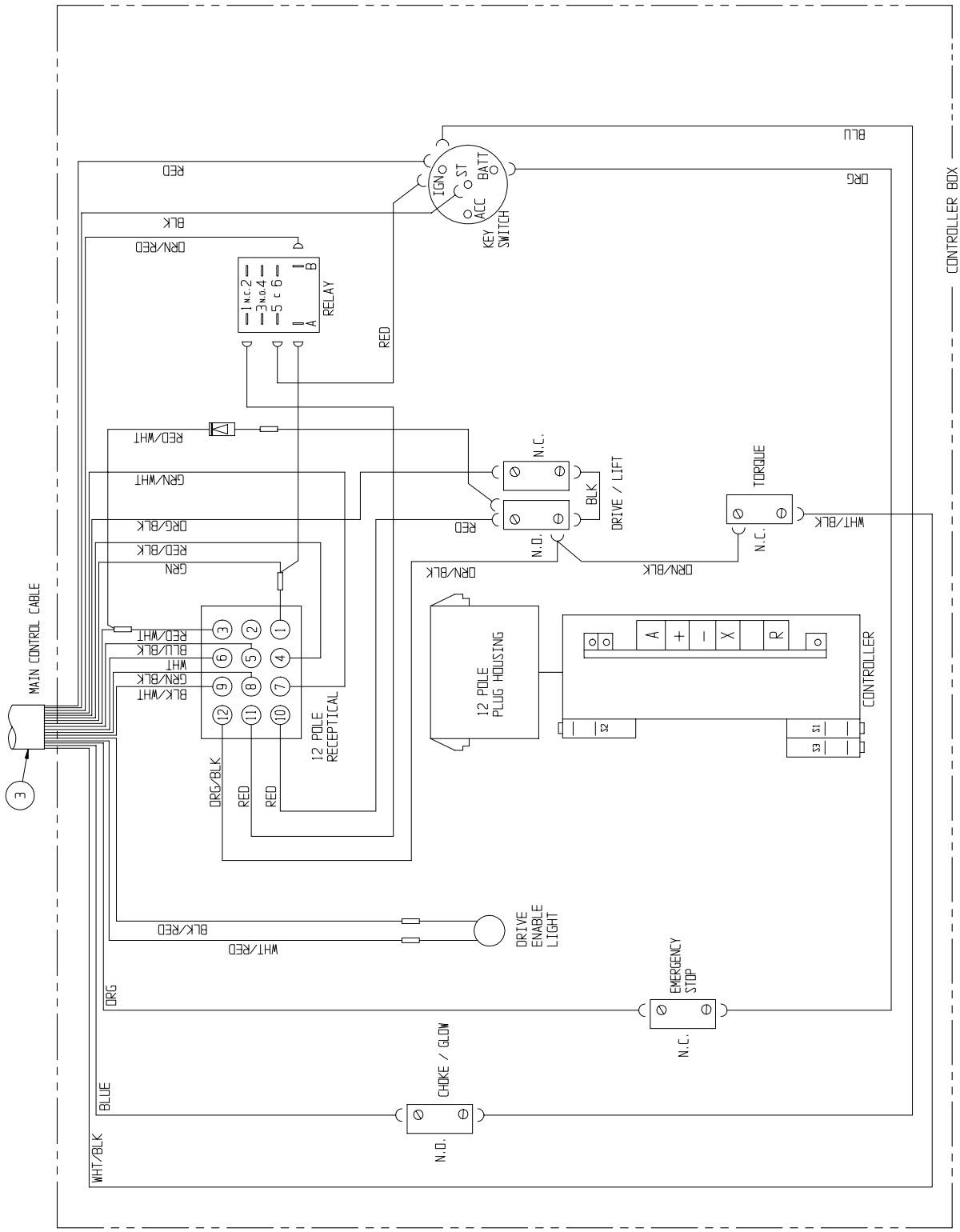

Final Assembly, LX50

Drawing 3 of 3

FINAL ASSEMBLY, LX50 FOUR-WHEEL DRIVE DUAL FUEL, STANDARD DECK

067548-010

ITEM	PART NO.	DESCRIPTION	QTY.
1	067509-001	BASIC ASSY	1
2	067528-010	CONTROLLER ASSY	1
3	067536-012	CONTROL CABLE ASSY	1
4	067532-182	LABEL-KIT	1
5	067533-023	HOSE-KIT	1
6	067530-005	GUARDRAIL	1
7	067522-011	POWER MODULE ASSEMBLY	1
8	067521-022	CONTROL MODULE ASSEMBLY	1
9	067534-015	HYDRAULIC SCHEMATIC	REF
10	067535-056	ELECTRICAL SCHEMATIC	REF
11	029490-099	CABLE 2 COND. 16 GA.	30 FT
12	067692-000	CLIP, CABLE RETAINER	4
13	029457-099	WIRE 16AWG THHN GREEN	.2 FT
14	029945-013	LEVEL SENSOR	1
15	011252-006	SCRW, 1/4-20 X 3/4	4
16	011248-004	LOCKNUT, 1/4-20 UNC	8
17	065373-005	MAGNET	2

ITEM	PART NO.	DESCRIPTION	QTY.
18	065373-006	SWITCH	2
19	067913-000	ALUM. SW. PAD	1
20	026551-005	RIVET 1/8 X 1/4 GRIP	8
21	029490-099	CABLE 2 COND. 16 GA.	8 FT
22	029620-002	CONN. BUTT 16-14 GA.	12
23	063497-001	MERCURY SWITCH (UP LIMIT)	1
24	013919-013	CLAMP	1
25	014996-004	WASHER, 1/4 SAE FLAT	8
26	067699-000	HOSE CLAMP CHANNEL	2
27	013283-002	CABLE MOUNT	4
28	067758-099	NYLON HOSE GUARD	11.7FT
29	012865-099	WIRE LOOM 3/4 DIA	8 FT
30	067863-000	SWITCH MOUNT	1
33	067492-003	WIRE HARNESS, ENGINE EXTENSION	1
34	014914-001	CONN. MALE PUSH, 16-14 AWG, .25 TAB	2
35	020398-012	CLAMP, CUSHIONED, Ø 1 1/2	4

NOTES:

1. HYDRAULIC PRESSURE SETTING
   FORWARD COUNTER BALANCE - 800 PSI
   REVERSE COUNTER BALANCE - 800 PSI
   DRIVE MOTOR RELIEF - 3000 PSI
   STEERING - 1500 PSI

2. ENGINE SPEED
   FULL THROTTLE - 3400 ±50 RPM
   IDLE SPEED - 1350 ±50 RPM

3. DRIVE SPEED
   SLOW - .30-.35 MPH (38-45 SEC. @ 20 FT.)
   HIGH - 2.9-3.1 MPH (4.4-4.7 SEC. @ 20 FT.)

4. LIFT SPEED
   UP - 80 SECONDS DOWN - 75 SECONDS

5. PROOF LOAD - 1500 LBS.

6. RATED LOAD - 1000 LBS./455 KG.

7. GRADABILITY 24% MIN. (2900 LBS. DRAWBAR PULL)

8. CAUTION:
   MAKE SURE THAT PUMP IS FILLED WITH HYDRAULIC OIL PRIOR TO OPERATION, OR SERIOUS DAMAGE WILL OCCUR.

9. CHECK TIRE PRESSURE (10-16.5 NHS 8 PLY) @ 50 PSI

10.

11. SET MERCURY SWITCH (UP LIMIT) TO OPEN AT SPECIFIED DIMENSION TO PREVENT FULL EXTENSION OF LIFT CYL.

12. SET SWITCH TO OPEN LESS THEAN 2 FT. PLATFORM LIFT.

13. BLEED AIR OUT OF BRAKES.

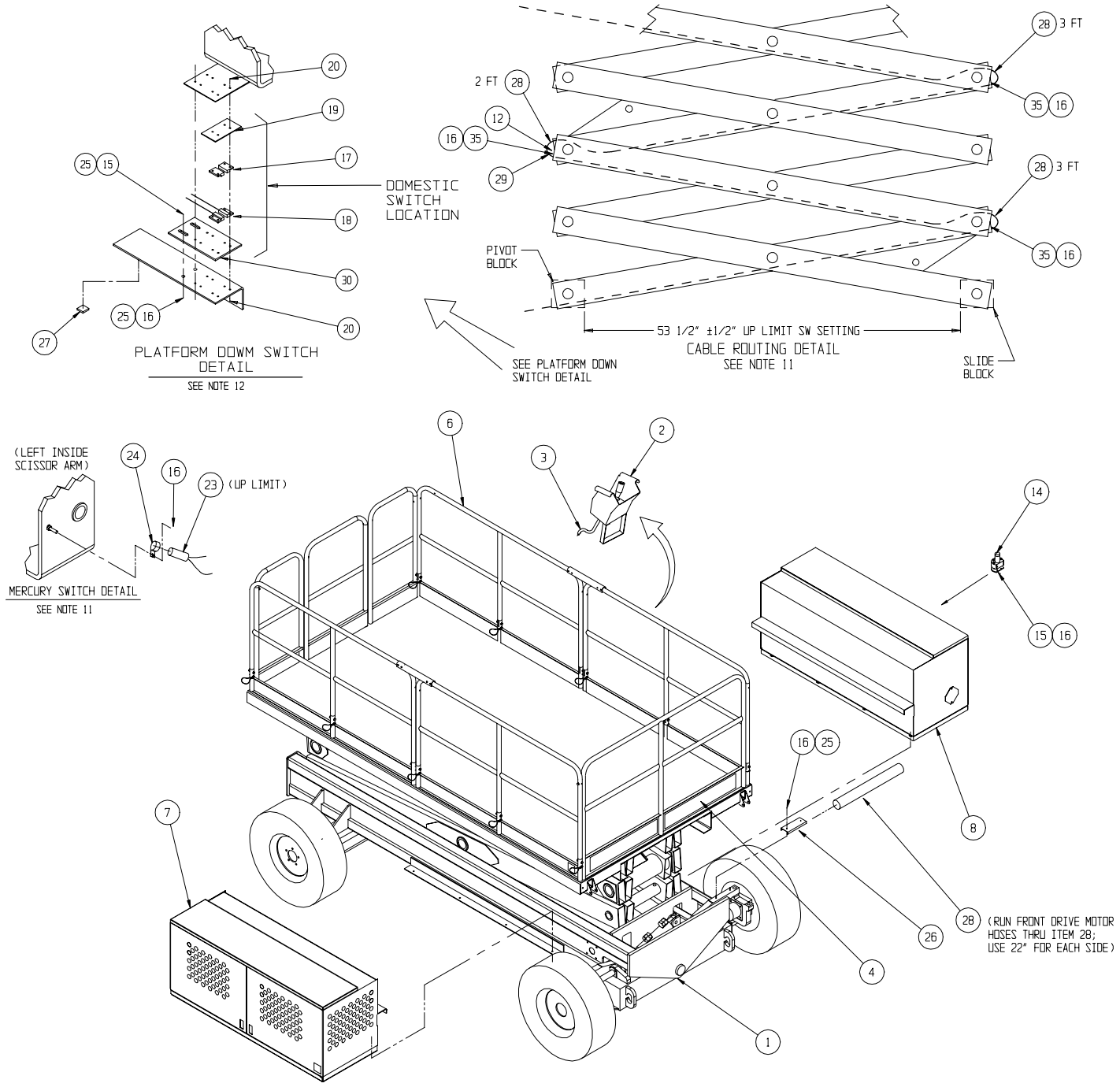

Final Assembly, LX50

Drawing 1 of 3

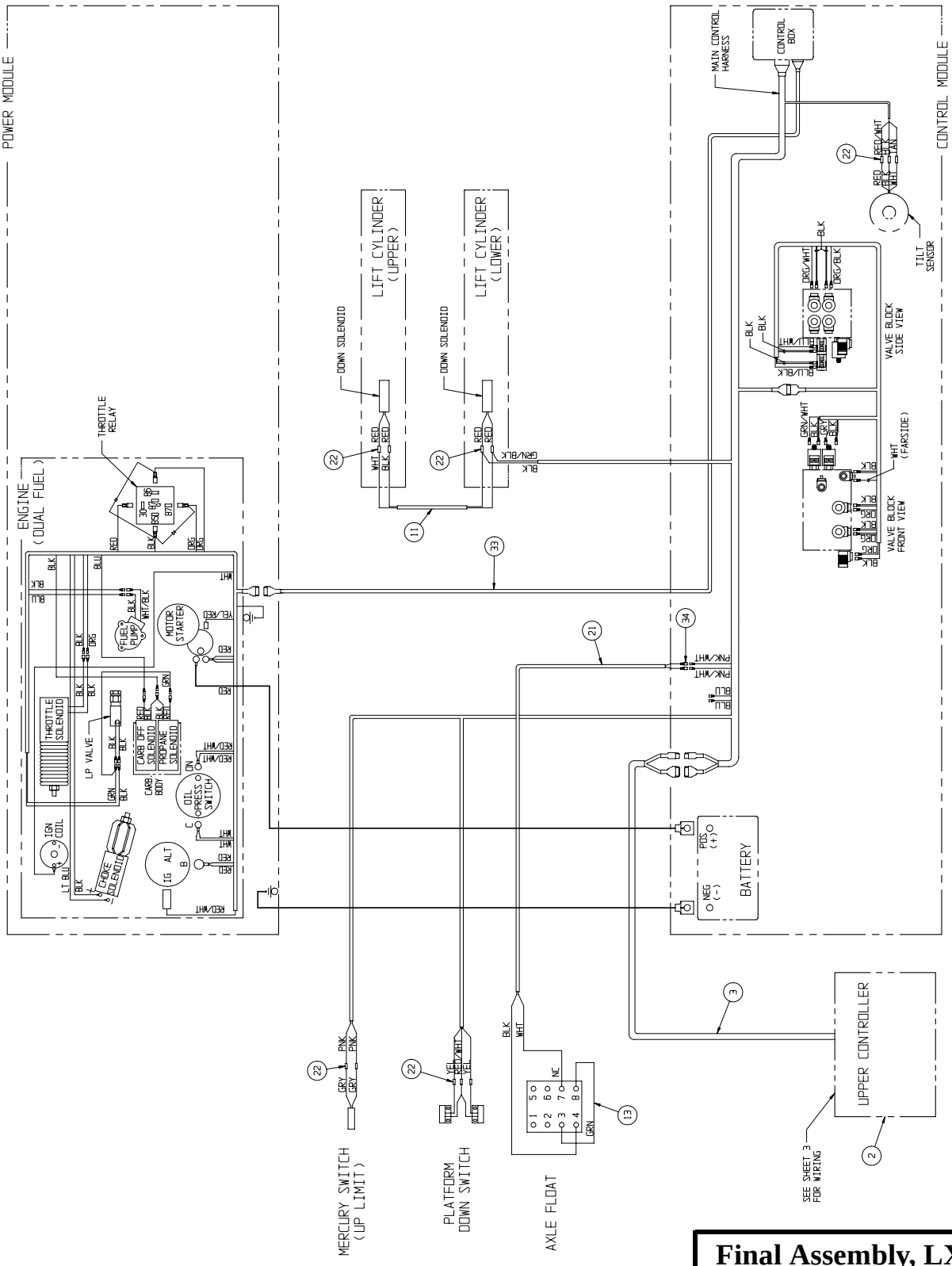

Final Assembly, LX50

Drawing 2 of 3

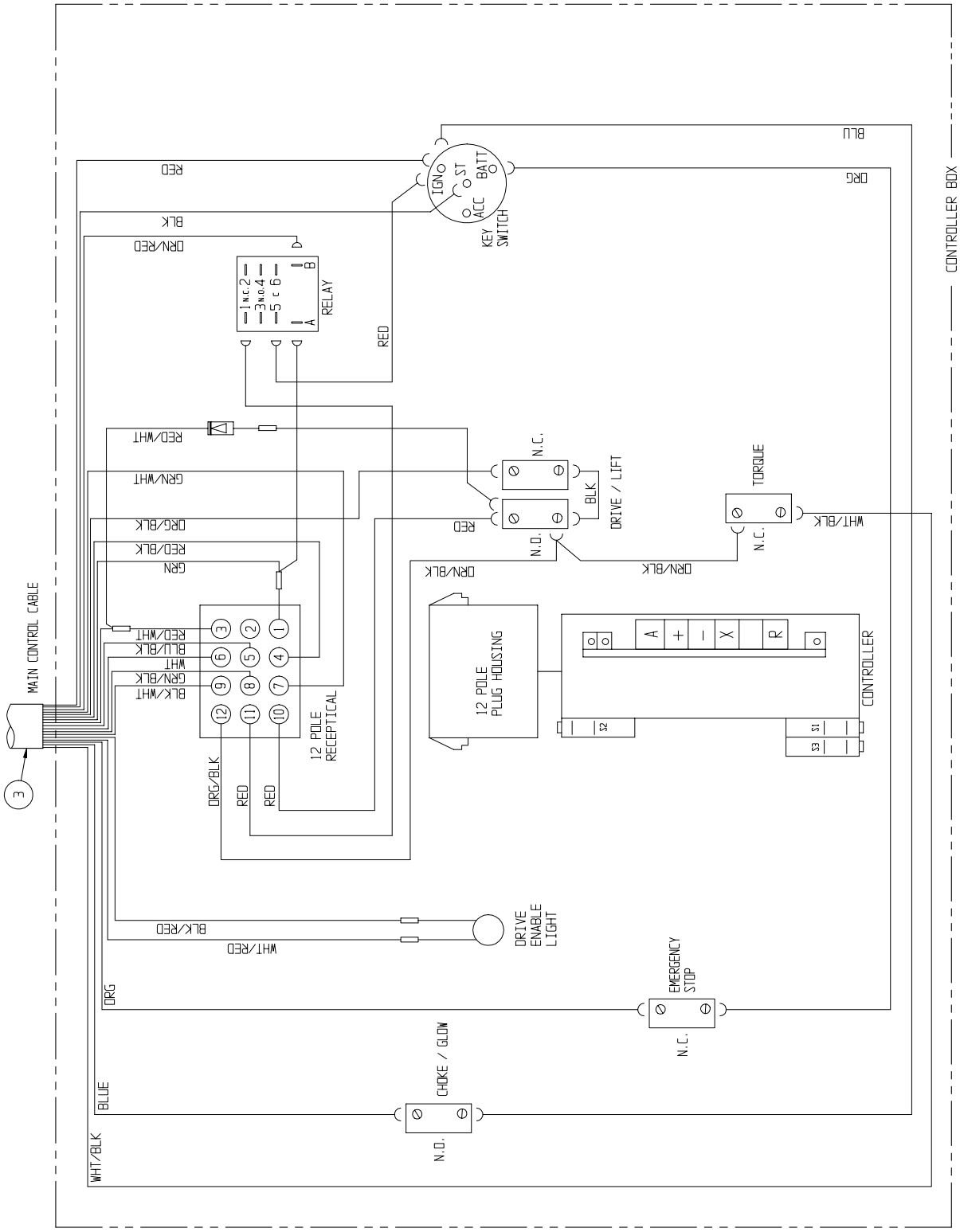

Final Assembly, LX50

Drawing 3 of 3

FINAL ASSEMBLY, LX50 FOUR-WHEEL DRIVE DIESEL, STANDARD DECK

067549-010

ITEM	PART NO.	DESCRIPTION	QTY.
1	067509-001	BASIC ASSY	1
2	067528-010	CONTROLLER ASSEMBLY	1
3	067536-012	CONTROL CABLE ASSEMBLY	1
4	067532-183	LABEL-KIT (DOM)	1
5	067533-023	HOSE-KIT	1
6	067530-005	GUARDRAIL	1
7	067522-013	POWER MODULE ASSEMBLY	1
8	067521-023	CONTROL MODULE ASSEMBLY	1
9	067534-017	HYDRAULIC SCHEMATIC	REF
10	067535-057	ELECTRICAL SCHEMATIC (DOM)	REF
11	020398-012	CLAMP, CUSHIONED, Ø 1 1/2	4
12	067692-000	CLIP, CABLE RETAINER	4
14	029945-013	LEVEL SENSOR	1
15	011252-006	SCRW, 1/4-20 X 3/4	4
16	011248-004	LOCKNUT, 1/4-20 UNC	8
17	065373-005	MAGNET	2

ITEM	PART NO.	DESCRIPTION	QTY.
18	065373-006	SWITCH	2
19	067913-000	ALUM. SW. PAD	1
20	026551-005	RIVET 1/8 X 1/4 GRIP	8
22	029620-002	CONN. BUTT 16-14 GA.	12
23	063497-001	MERCURY SWITCH	1
24	013919-013	CLAMP	1
25	014996-004	WASHER, 1/4 SAE FLAT	8
26	013283-002	CABLE MOUNT	4
27	014914-001	CONN. MALE PUSH, 16-14 AWG, .25 TAB	2
28	029490-099	CABLE 2 COND. 16 GA.	30 FT
29	012865-099	WIRE LOOM 3/4 DIA	8 FT
30	067863-000	SWITCH MOUNT	1
33	067492-003	WIRE HARNESS, ENGINE EXTENSION	1
34	067758-099	NYLON HOSE GUARD	11.7 FT
35	067699-000	HOSE CLAMP CHANNEL	2
36	029457-099	WIRE, 16 AWG, THHN, GREEN	.2 FT

NOTES:

1. HYDRAULIC PRESSURE SETTING
   FORWARD COUNTER BALANCE - 800 PSI
   REVERSE COUNTER BALANCE - 800 PSI
   DRIVE MOTOR RELIEF - 3000 PSI
   STEERING - 1500 PSI

2. ENGINE SPEED
   FULL THROTTLE - 3400 ±50 RPM
   IDLE SPEED - 1350 ±50 RPM

3. DRIVE SPEED
   SLOW - .30-.35 MPH (38-45 SEC. @ 20 FT.)
   HIGH - 2.9-3.1 MPH (4.4-4.7 SEC. @ 20 FT.)

4. LIFT SPEED
   UP - 80 SECONDS DOWN - 75 SECONDS

5. PROOF LOAD - 1500 LBS.

6. RATED LOAD - 1000 LBS./455 KG.

7. GRADABILITY 24% MIN. (2900 LBS. DRAWBAR PULL)

8. CAUTION:
   MAKE SURE THAT PUMP IS FILLED WITH HYDRAULIC OIL PRIOR TO OPERATION, OR SERIOUS DAMAGE WILL OCCUR.

9. CHECK TIRE PRESSURE (10-16.5 NHS 8 PLY) @ 50 PSI

10.

11. SET MERCURY SWITCH (UP LIMIT) TO OPEN AT SPECIFIED DIMENSION TO PREVENT FULL EXTENSION OF LIFT CYL.

12. SET SWITCH TO OPEN LESS THEAN 2 FT. PLATFORM LIFT.

13. BLEED AIR OUT OF BRAKES.

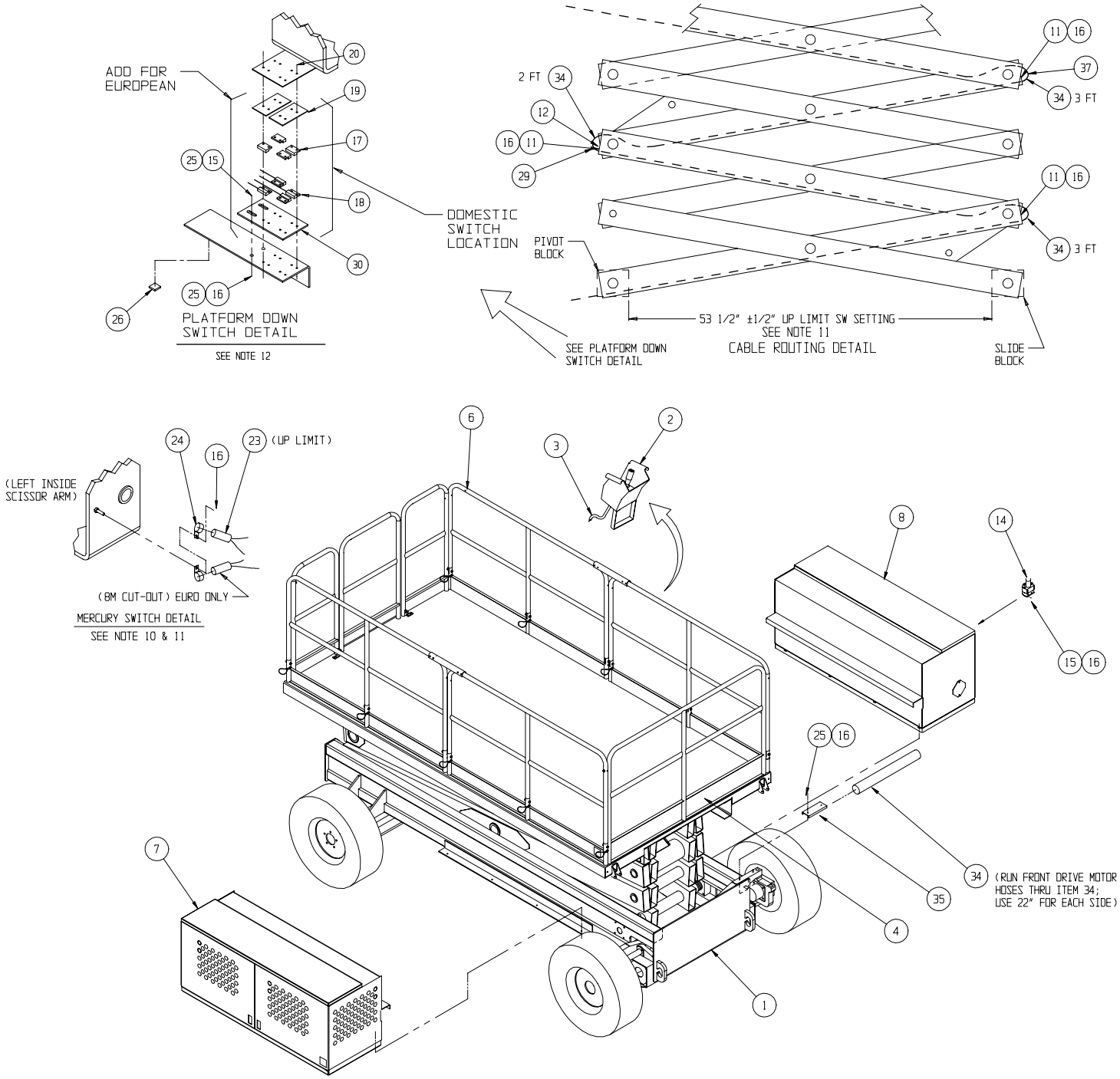

Final Assembly, LX50

Drawing 1 of 3

ILLUSTRATED PARTS BREAKDOWN

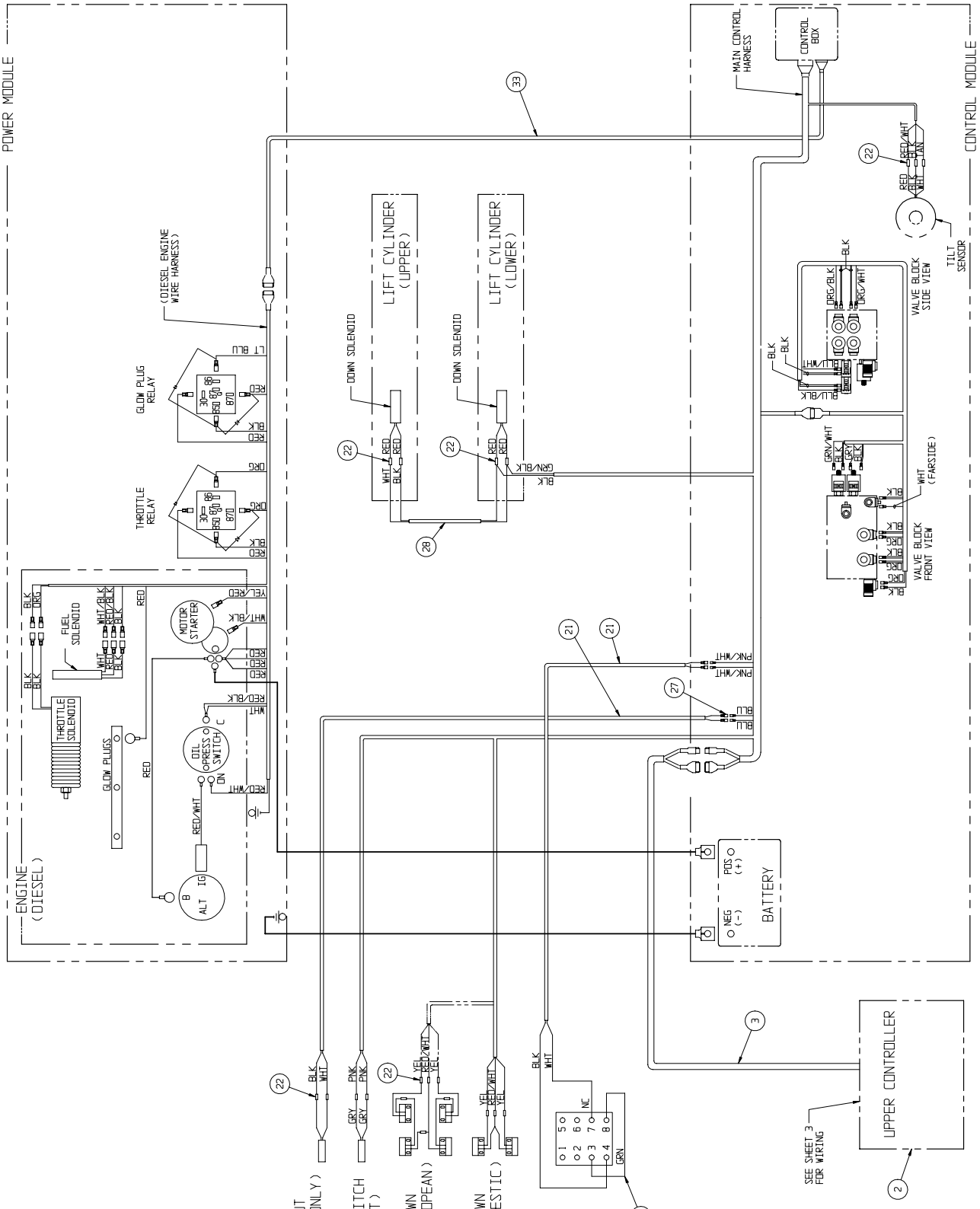

Final Assembly, LX50

Drawing 2 of 3

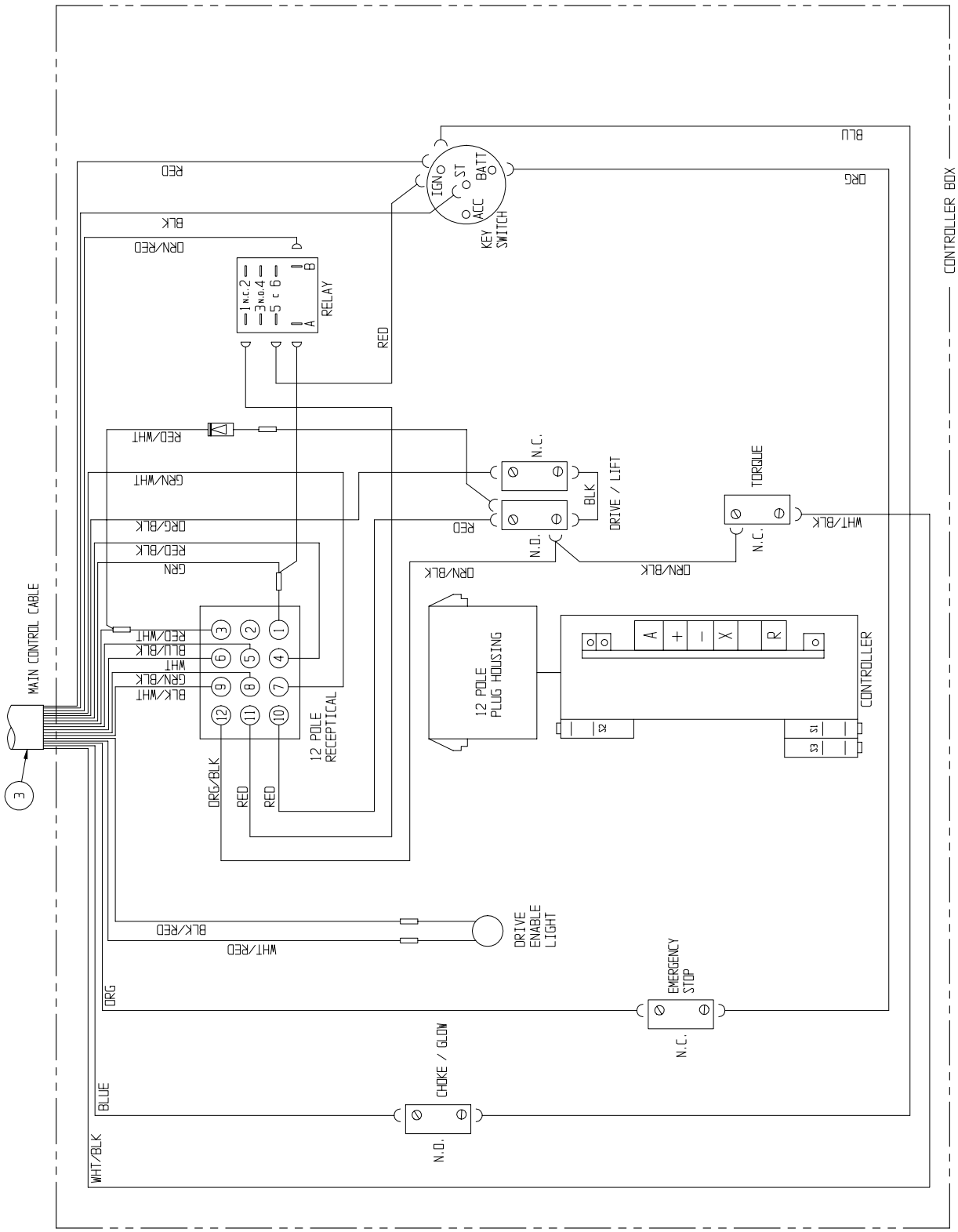

Final Assembly, LX50

Drawing 3 of 3

FINAL ASSEMBLY, LX50 TWO-WHEEL DRIVE DUAL FUEL, DUAL DECK

067408-010

ITEM	PART NO.	DESCRIPTION	QTY.
1	067419-000	BASIC ASSY	1
2	067528-011	CONTROLLER ASSY W/OUTRIGGERS	1
3	067536-012	CONTROL CABLE ASSY	1
4	067532-168	LABEL-KIT	1
5	067533-024	HOSE-KIT	1
6	030841-300	GUARDRAIL	1
7	067522-010	POWER MODULE ASSEMBLY	1
8	067521-028	CONTROL MODULE ASSEMBLY	1
9	067534-016	HYDRAULIC SCHEMATIC	REF
10	067535-058	ELECTRICAL SCHEMATIC	REF
11	067866-001	SLIDE-OUT DECK INSTL	1
12	067692-000	CLIP, CABLE RETAINER	4
13	000942-000	ORBIT LEVEL	1
14	029945-013	LEVEL SENSOR	1
15	011252-006	SCRW, 1/4-20 X 3/4	4
16	011248-004	LOCKNUT, 1/4-20 UNC	13
17	065373-005	MAGNET	2
18	065373-006	SWITCH	2
19	067913-000	ALUM. SW. PAD	1

ITEM	PART NO.	DESCRIPTION	QTY.
20	026551-005	RIVET 1/8 X 1/4 GRIP	8
23	063497-001	MERCURY SWITCH	2
24	013919-013	CLAMP	2
25	014996-004	WASHER, 1/4 SAE FLAT	4
26	067866-002	SLIDE OUT DECK-REAR	1
27	013283-002	CABLE MOUNT	4
28	067482-000	OUTRIGGER INSTALATION	1
29	012865-099	WIRE LOOM 3/4 DIA	8 FT
30	067863-000	SWITCH MOUNT	1
35	064794-000	LEVEL MOUNT	1
36	014924-008	U-BOLT	2
37	011721-008	SCREW, RND HD, MACH. 4-40 X 1	3
38	005133-000	SPRING	3
40	011248-049	NUT, HEX, 4-40 ESNA	3
41	020398-012	CLAMP, CUSHIONED, Ø 1 1/2	5
42	067758-099	NYLON HOSE GUARD	8 FT
43	068132-001	RELAY - 12 VDC	2
44	011826-006	SCREW - #10-32 x 3/4	2
45	011249-003	NUT - #10-32 HEX	2

NOTES:

1. HYDRAULIC PRESSURE SETTING
   FORWARD COUNTER BALANCE - 500 PSI
   REVERSE COUNTER BALANCE - 500 PSI
   DRIVE MOTOR RELIEF - 3000 PSI
   STEERING - 1500 PSI
2. ENGINE SPEED
   FULL THROTTLE - 3400 ±50 RPM
   IDLE SPEED - 1350 ±50 RPM
3. DRIVE SPEED
   SLOW - .30-.35 MPH (38-45 SEC. @ 20 FT.)
   HIGH - 2.9-3.1 MPH (4.4-4.7 SEC. @ 20 FT.)
4. LIFT SPEED
   UP - 90 SECONDS DOWN - 120 SECONDS
5. PROOF LOAD - 1125 LBS.
6. RATED LOAD - 750 LBS./340 KG.
7. GRADABILITY 24% MIN. (2900 LBS. DRAWBAR PULL)
8. CAUTION:
   MAKE SURE THAT PUMP IS FILLED WITH HYDRAULIC OIL PRIOR TO OPERATION, OR SERIOUS DAMAGE WILL OCCUR.
9. CHECK THAT POLYFILL TIRES ARE USED.
10. SET MERCURY SWITCH (DRIVE CUT-OUT) TO OPEN @ 40 FT. PLATFORM HEIGHT.
11. SET MERCURY SWITCH (UP LIMIT) TO OPEN AT SPECIFIED DIMENSION TO PREVENT FULL EXTENSION OF LIFT CYL.
12. SET SWITCH TO OPEN LESS THAN 2 FT. PLATFORM LIFT.
13. BLEED AIR OUT OF BRAKES.

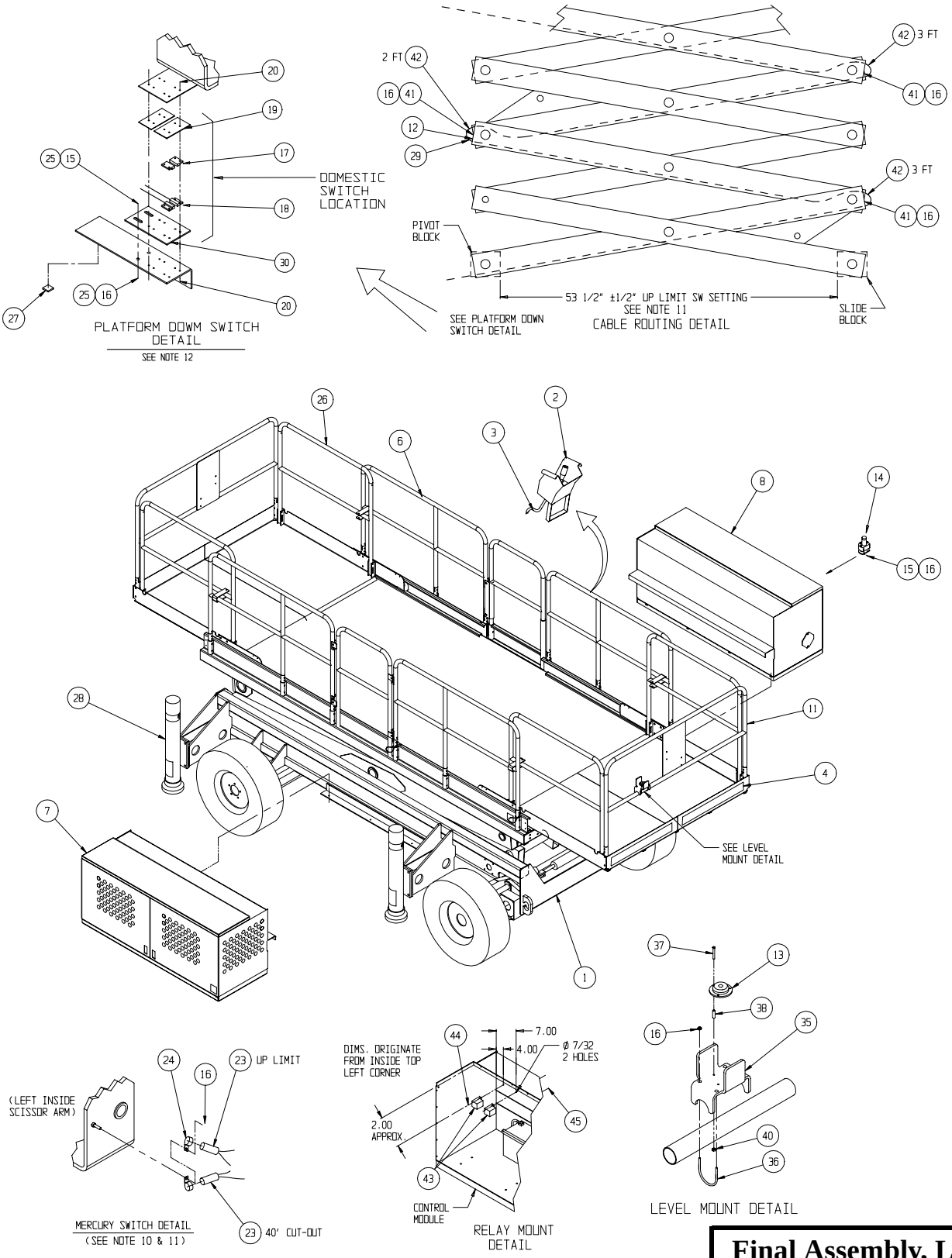

Final Assembly, LX50

Drawing 1 of 3

ILLUSTRATED PARTS BREAKDOWN

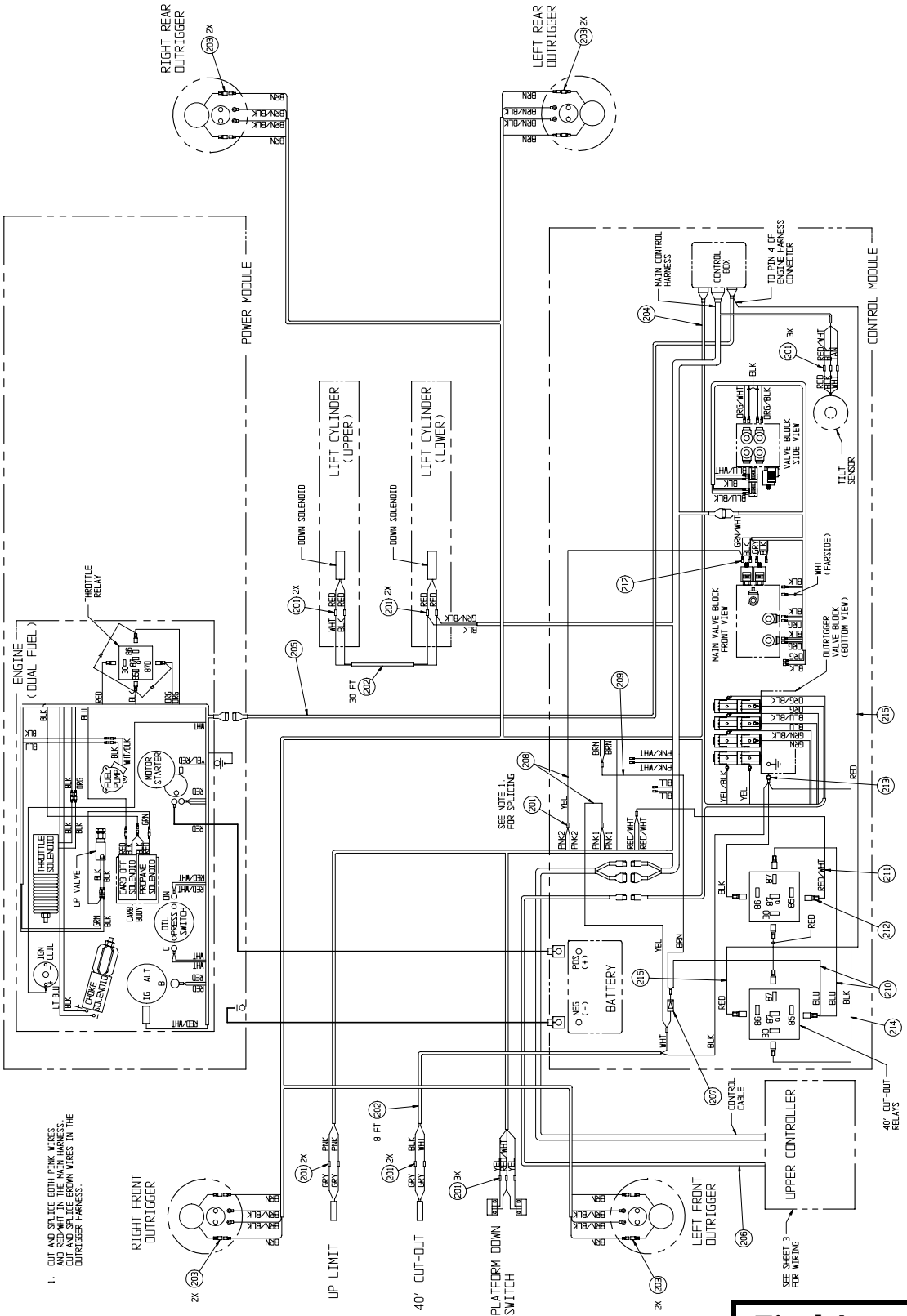

Final Assembly, LX50

Drawing 2 of 3

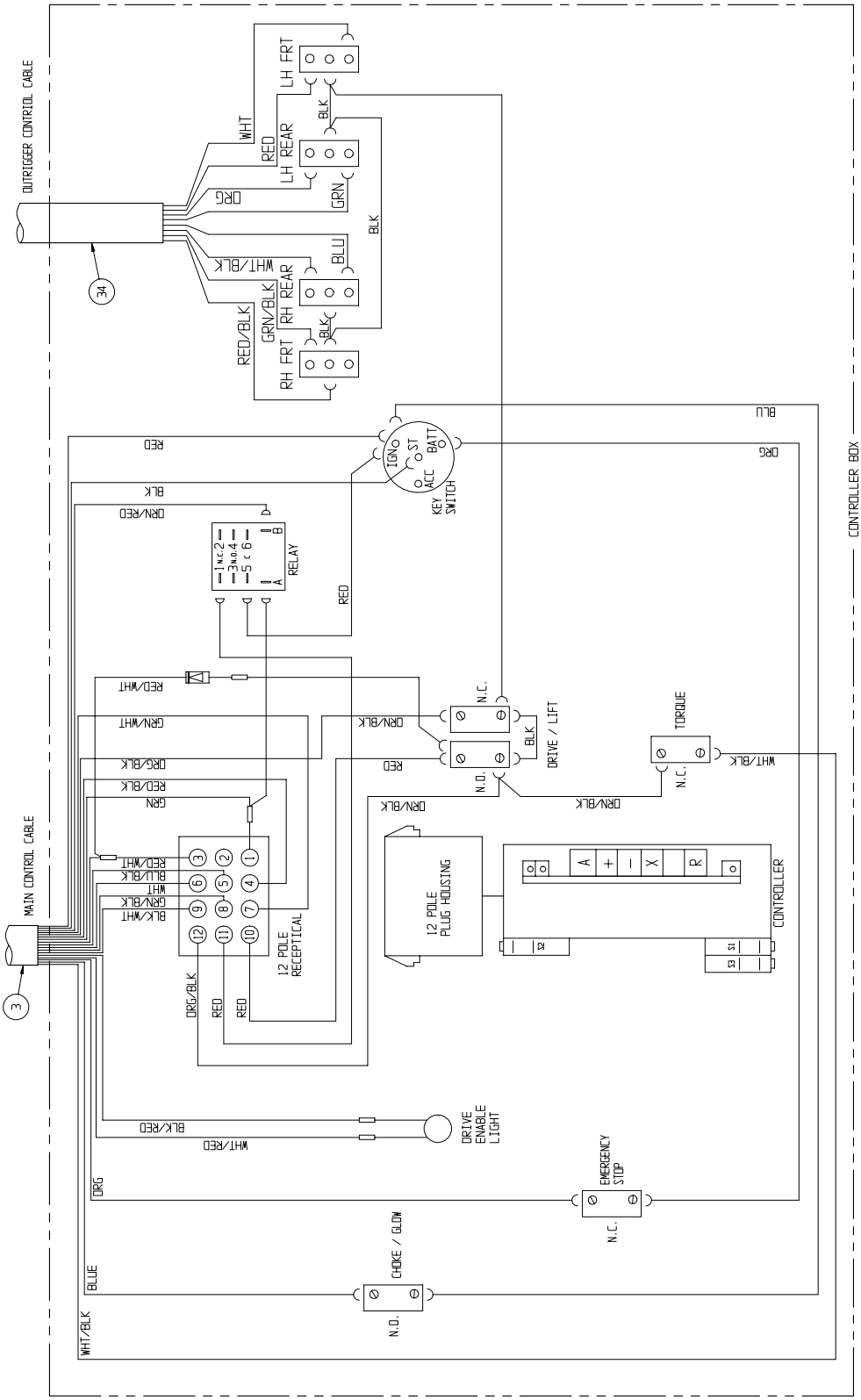

Final Assembly, LX50

Drawing 3 of 3

FINAL ASSEMBLY, LX50 TWO-WHEEL DRIVE DIESEL, DUAL DECK

067409-010

ITEM	PART NO.	DESCRIPTION	QTY.
1	067419-000	BASIC ASSY	1
2	067528-011	CONTROLLER ASSEMBLY W/OUTRIGGERS (DOM)	1
3	067536-012	CONTROL CABLE ASSEMBLY	1
4	067532-169	LABEL-KIT (DOM)	1
5	067533-024	HOSE-KIT	1
6	030841-300	GUARDRAIL	1
7	067522-012	POWER MODULE ASSEMBLY	1
8	067521-029	CONTROL MODULE ASSEMBLY (DOM)	1
9	067534-016	HYDRAULIC SCHEMATIC (DOM)	REF
10	067535-059	ELECTRICAL SCHEMATIC (DOM)	REF
12	029945-013	LEVEL SENSOR	1
13	011252-006	SCRW, 1/4-20 X 3/4	4
14	011248-004	LOCKNUT, 1/4-20 UNC	13
15	065373-005	MAGNET	2
16	065373-006	SWITCH	2
17	067913-000	ALUM. SW. PAD	1
18	026551-005	RIVET 1/8 X 1/4 GRIP	8
21	063497-001	MERCURY SWITCH	2
22	013919-013	CLAMP	2

ITEM	PART NO.	DESCRIPTION	QTY.
23	014996-004	WASHER, 1/4 SAE FLAT	4
24	067866-002	SLIDE OUT DECK -REAR	1
25	013283-002	CABLE MOUNT	4
27	012865-099	WIRE LOOM 3/4 DIA	8
28	067863-000	SWITCH MOUNT	1
29	000942-000	ORBIT LEVEL	1
30	064794-000	LEVEL MOUNT	1
33	067866-001	SLIDE-OUT DECK INSTL	1
34	067692-000	CLIP, CABLE RETAINER	4
35	067482-000	OUTRIGGER INSTALLATION	1
37	067758-099	NYLON HOSE GUARD	9 FT
38	020398-012	CLAMP, CUSHIONED, Ø 1 1/2	5
39	014924-008	U-BOLT	2
40	011721-008	SCREW, RND HD, MACH., 4-40 X 1	3
41	005133-000	SPRING	3
43	011248-049	NUT, HEX, 4-40 ESNA	3
45	068132-001	RELAY - 12 VDC	2
46	011826-006	SCREW - #10-32 x 3/4	2
47	011249-003	NUT - #10-32 HEX	2

NOTES:

1. HYDRAULIC PRESSURE SETTING
   FORWARD COUNTER BALANCE - 500 PSI
   REVERSE COUNTER BALANCE - 500 PSI
   DRIVE MOTOR RELIEF - 3000 PSI
   STEERING - 1500 PSI

2. ENGINE SPEED
   FULL THROTTLE - 3000 ±50 RPM
   IDLE SPEED - 1350 ±50 RPM

3. DRIVE SPEED
   SLOW - .30-.35 MPH (38-45 SEC. @ 20 FT.)
   HIGH - 2.9-3.1 MPH (4.4-4.7 SEC. @ 20 FT.)

4. LIFT SPEED
   UP - 90 SECONDS DOWN - 120 SECONDS

5. PROOF LOAD - 1125 LBS.

6. RATED LOAD - 750 LBS./340 KG.

7. GRADABILITY 24% MIN. (2900 LBS. DRAWBAR PULL)

8. CAUTION:
   MAKE SURE THAT PUMP IS FILLED WITH HYDRAULIC OIL PRIOR TO OPERATION, OR SERIOUS DAMAGE WILL OCCUR.

9. CHECK THAT POLYFILL TIRES ARE USED.

10. SET MERCURY SWITCH (DRIVE CUT-OUT) TO OPEN @ 8 METERS (26'-3") FOR EURO AND 40 FT. FOR DOM.

11. SET MERCURY SWITCH (UP LIMIT) TO OPEN AT SPECIFIED DIMENSION TO PREVENT FULL EXTENSION OF LIFT CYL.

12. SWITCH TO OPEN LESS THAN 2 FT. PLATFORM LIFT.

13. BLEED AIR OUT OF BRAKES.

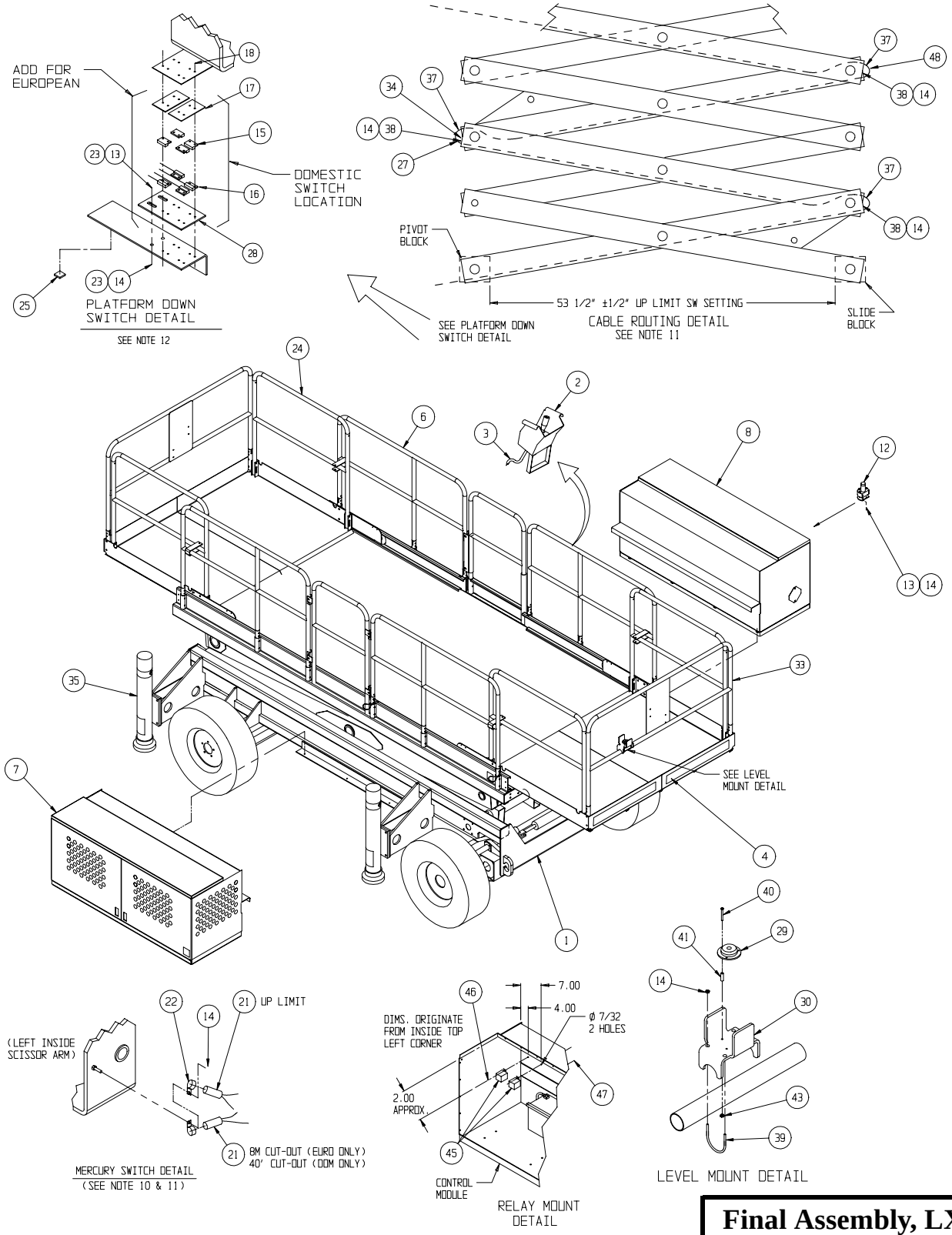

Final Assembly, LX50

Drawing 1 of 3

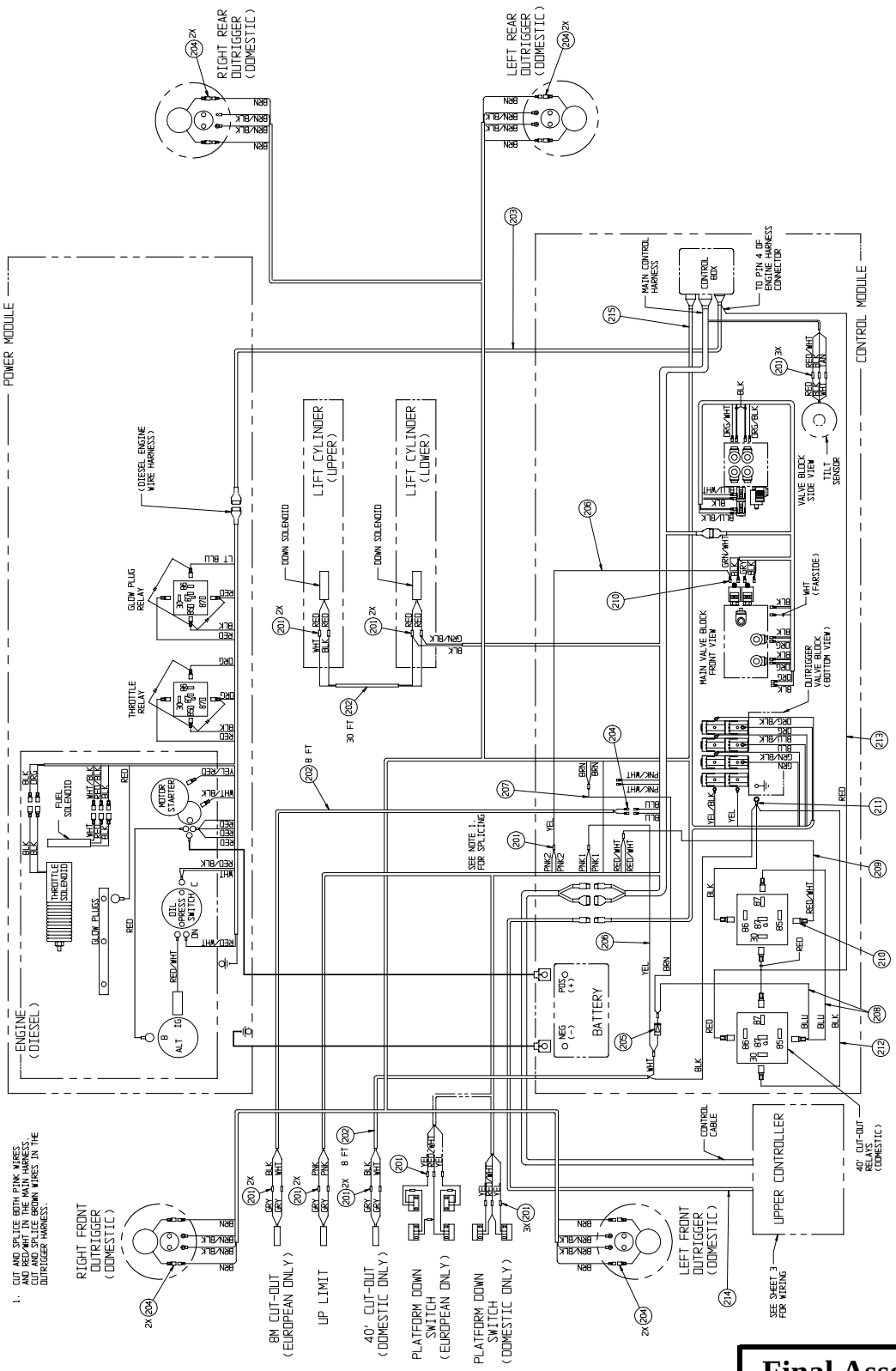

Final Assembly, LX50

Drawing 1 of 3

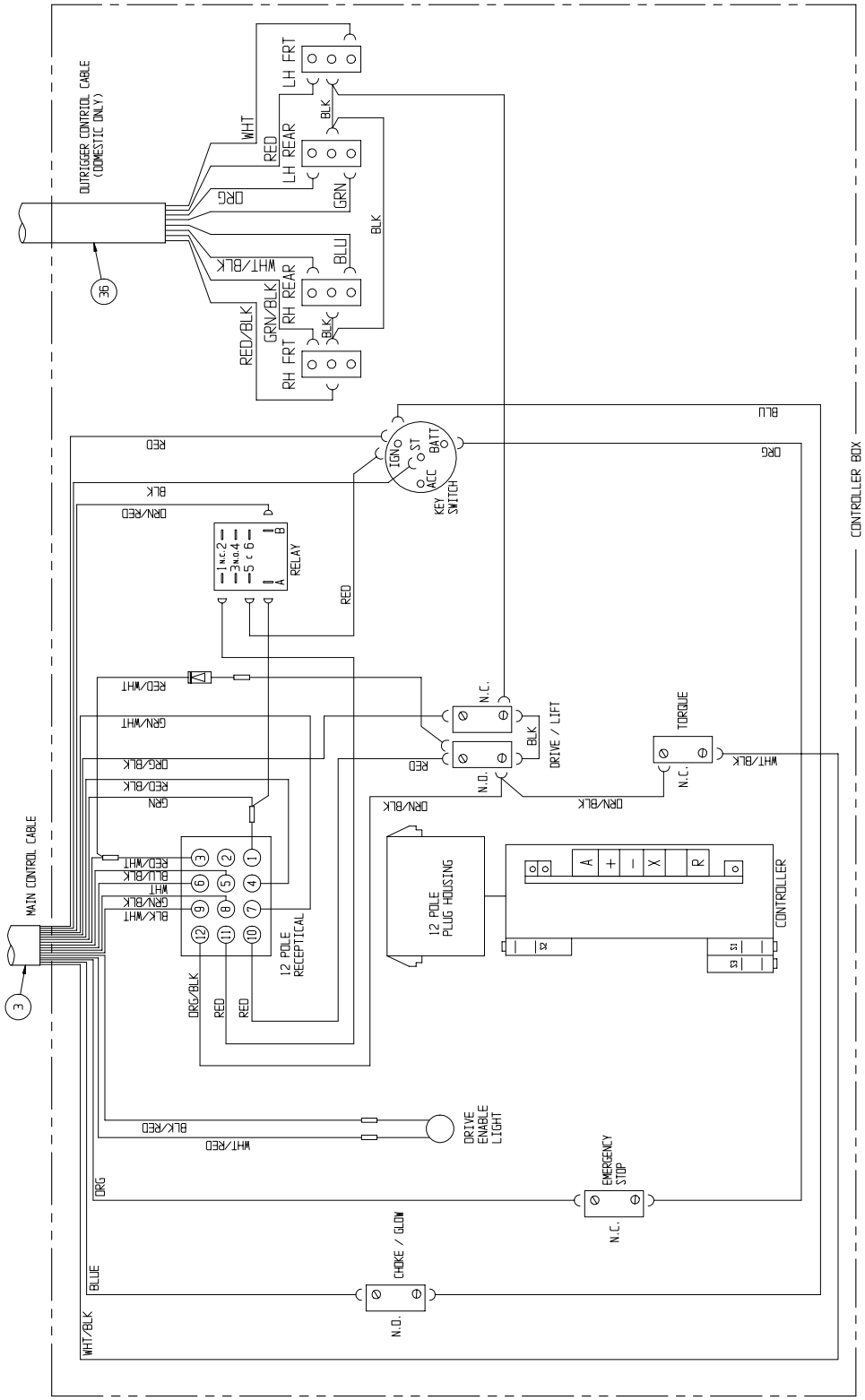

Final Assembly, LX50

Drawing 1 of 3

FINAL ASSEMBLY, LX50 FOUR-WHEEL DRIVE DUAL FUEL, DUAL DECK

067410-010

ITEM	PART NO.	DESCRIPTION	QTY.
1	067420-000	BASIC ASSY	1
2	067528-011	CONTROLLER ASSY W/OUTRIGGERS	1
3	067536-012	CONTROL CABLE ASSY	1
4	067532-170	LABEL-KIT	1
5	067533-025	HOSE-KIT	1
6	030841-300	GUARDRAIL	1
7	067522-011	POWER MODULE ASSEMBLY	1
8	067521-030	CONTROL MODULE ASSEMBLY	1
9	067534-017	HYDRAULIC SCHEMATIC	REF
10	067535-060	ELECTRICAL SCHEMATIC	REF
11	067866-001	SLIDE-OUT DECK INSTL	1
12	067692-000	CLIP, CABLE RETAINER	4
14	029945-013	LEVEL SENSOR	1
15	011252-006	SCRW, 1/4-20 X 3/4	4
16	011248-004	LOCKNUT, 1/4-20 UNC	13
17	065373-005	MAGNET	2
18	065373-006	SWITCH	2
19	067913-000	ALUM. SW. PAD	1
20	026551-005	RIVET 1/8 X 1/4 GRIP	8
23	063497-001	MERCURY SWITCH	2

ITEM	PART NO.	DESCRIPTION	QTY.
24	013919-013	CLAMP	2
25	014996-004	WASHER, 1/4 SAE FLAT	8
26	067699-000	HOSE CLAMP CHANNEL	2
27	013283-002	CABLE MOUNT	4
28	067758-099	NYLON HOSE GUARD	11.67 FT
29	012865-099	WIRE LOOM 3/4 DIA	8 FT
30	067863-000	SWITCH MOUNT	1
31	000942-00	ORBIT LEVEL	1
32	064794-000	LEVEL MOUNT	1
35	067866-002	SLIDE OUT DECK - REAR	1
36	067482-000	OUTRIGGER INSTALLATION	1
39	014924-008	U-BOLT	2
40	011721-008	SCREW, RND HD, MACH., 4-40 X 1	3
41	005133-000	SPRING	3
43	011248-049	NUT, HEX, 4-40 ESNA	3
44	020398-012	CLAMP, CUSHIONED, Ø 1 1/2	5
46	068132-001	RELAY - 12 VDC	2
47	011826-006	SCREW - #10-32 x 3/4	2
48	011249-003	NUT - #10-32 HEX	2

NOTES:

1. HYDRAULIC PRESSURE SETTING
   FORWARD COUNTER BALANCE - 500 PSI
   REVERSE COUNTER BALANCE - 500 PSI
   DRIVE MOTOR RELIEF - 3000 PSI
   STEERING - 1500 PSI
2. ENGINE SPEED
   FULL THROTTLE - 3400 ±50 RPM
   IDLE SPEED - 1350 ±50 RPM
3. DRIVE SPEED
   SLOW - .30-.35 MPH (38-45 SEC. @ 20 FT.)
   HIGH - 2.9-3.1 MPH (4.4-4.7 SEC. @ 20 FT.)
4. LIFT SPEED
   UP - 90 SECONDS DOWN - 120 SECONDS
5. PROOF LOAD - 1125 LBS.
6. RATED LOAD - 750 LBS./340 KG.
7. GRADABILITY 24% MIN. (2900 LBS. DRAWBAR PULL)
8. CAUTION:
   MAKE SURE THAT PUMP IS FILLED WITH HYDRAULIC OIL PRIOR TO OPERATION, OR SERIOUS DAMAGE WILL OCCUR.
9. CHECK THAT POLYFILL TIRES ARE USED.
10. SET MERCURY SWITCH (DRIVE CUT-OUT) TO OPEN AT 40 FT. PLATFORM HEIGHT.
11. SET MERCURY SWITCH (UP LIMIT) TO OPEN AT SPECIFIED DIMENSION TO PREVENT FULL EXTENSION OF LIFT CYL.
12. SET SWITCH TO OPEN LESS THEAN 2 FT. PLATFORM LIFT.
13. BLEED AIR OUT OF BRAKES.

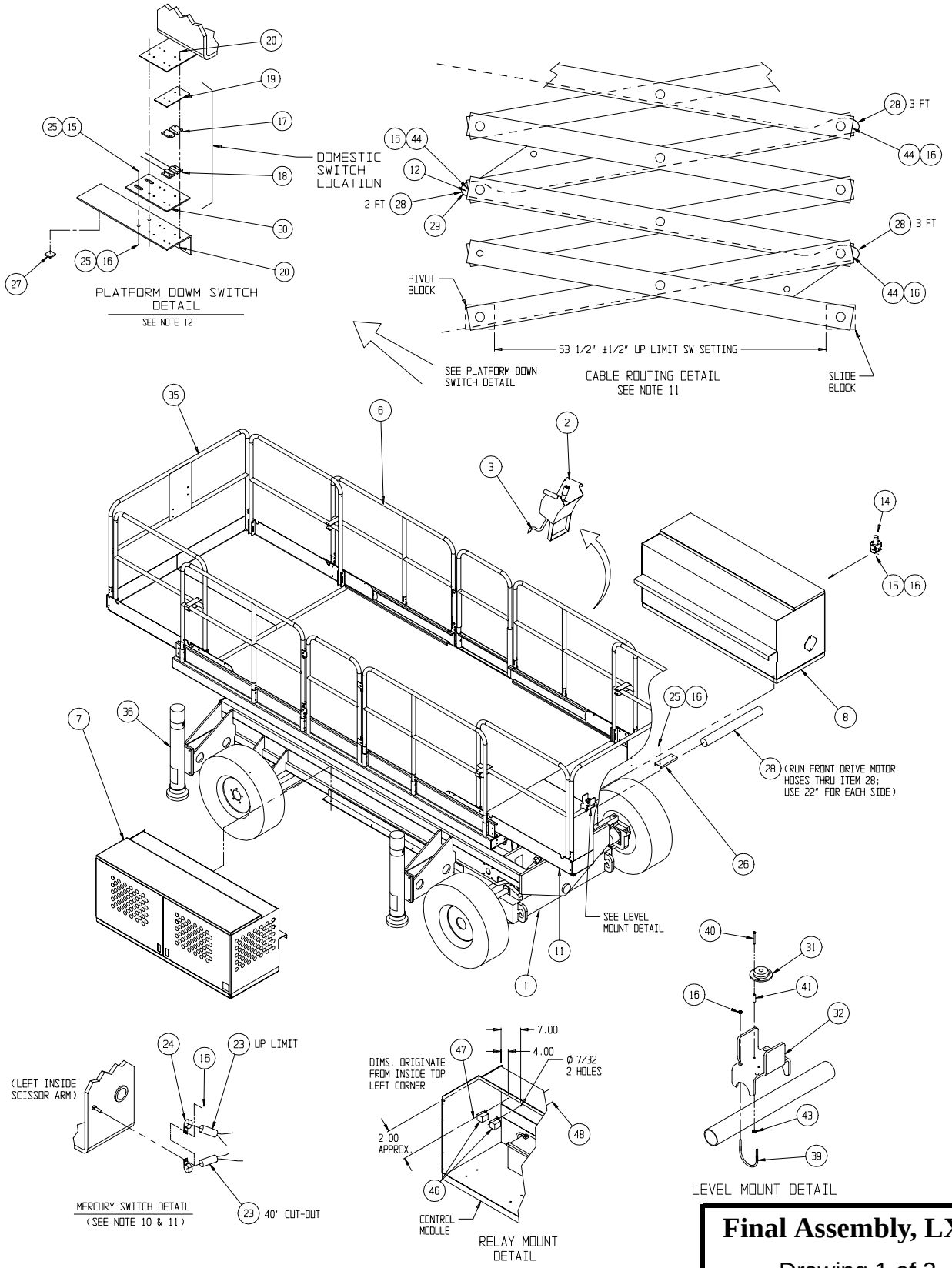

Final Assembly, LX50

Drawing 1 of 3

Final Assembly, LX50

Drawing 2 of 3

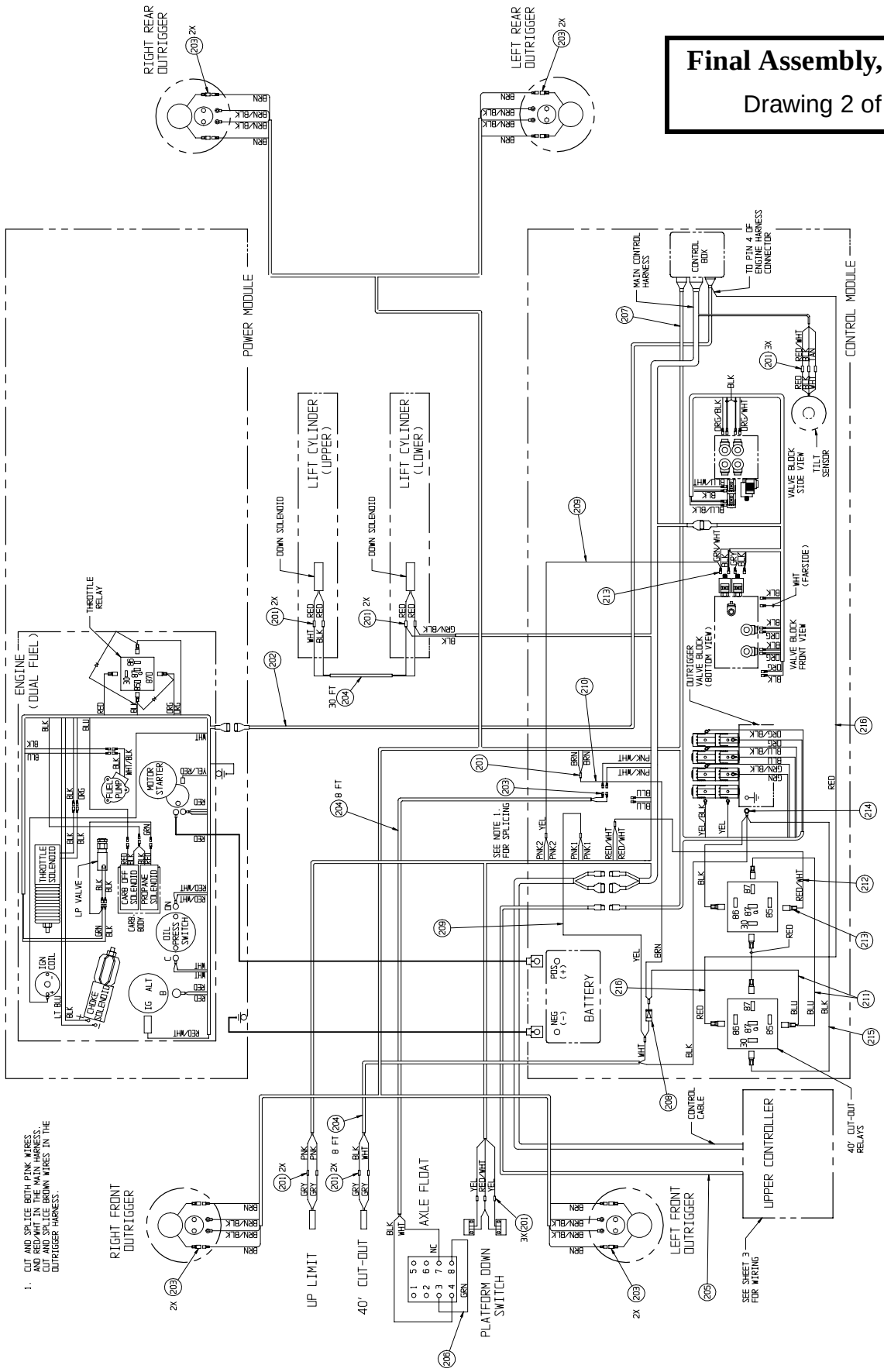

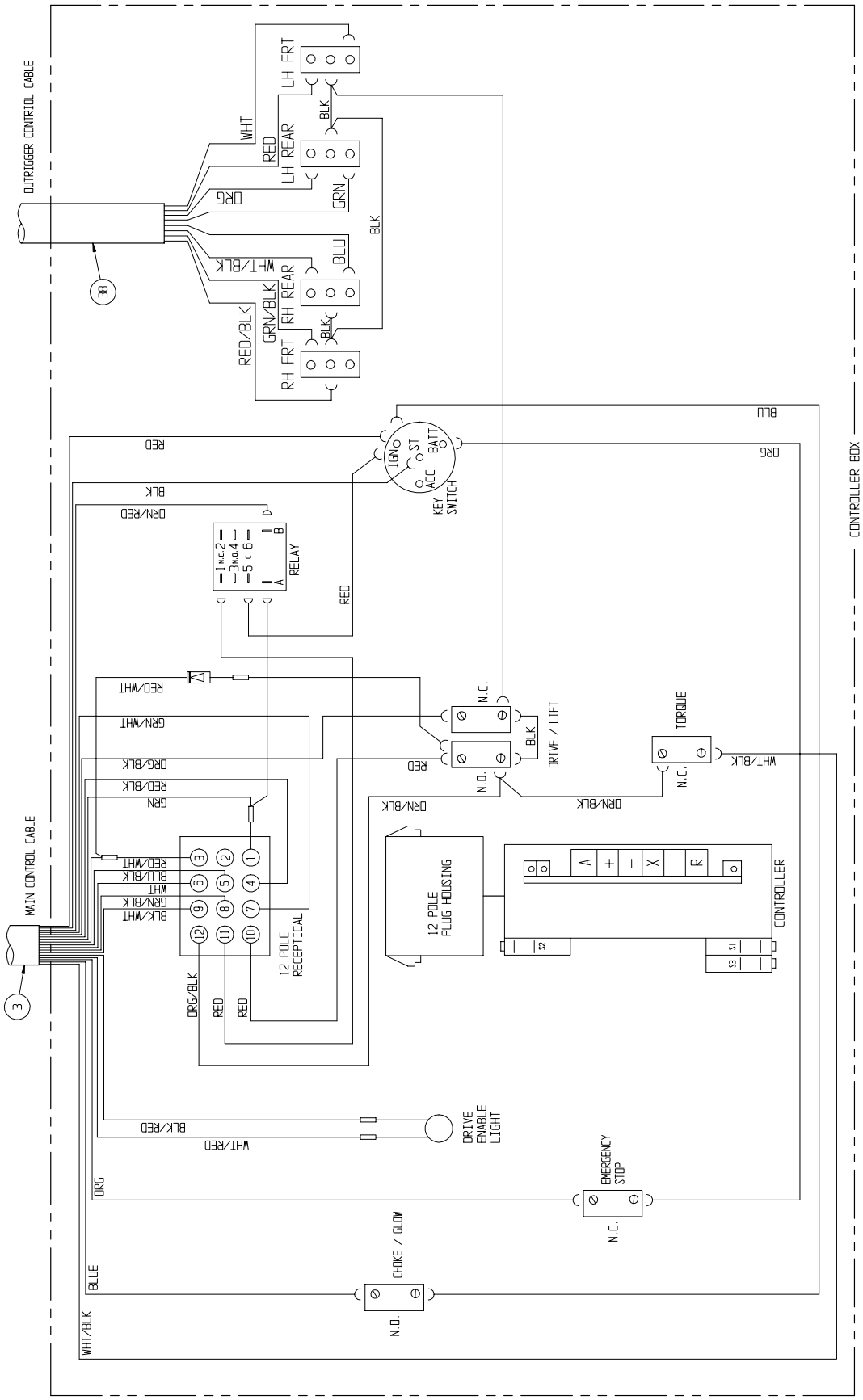

Final Assembly, LX50

Drawing 3 of 3

FINAL ASSEMBLY, LX50 FOUR-WHEEL DIESEL, DUAL DECK

067411-010

ITEM	PART NO.	DESCRIPTION	QTY.
1	067420-000	BASIC ASSY	1
2	067528-011	CONTROLLER ASSEMBLY (DOM)	1
3	067536-012	CONTROL CABLE ASSEMBLY	1
4	067532-171	LABEL-KIT (DOM)	1
5	067533-025	HOSE-KIT	1
6	030841-300	GUARDRAIL	1
7	067522-013	POWER MODULE ASSEMBLY	1
8	067521-031	CONTROL MODULE ASSEMBLY (DOM)	1
9	067534-017	HYDRAULIC SCHEMATIC (DOM)	REF
10	067535-061	ELECTRICAL SCHEMATIC (DOM)	REF
11	067866-001	SLIDE-OUT DECK INSTL	1
12	067692-000	CLIP, CABLE RETAINER	4
14	029945-013	LEVEL SENSOR	1
15	011252-006	SCRW, 1/4-20 X 3/4	4
16	011248-004	LOCKNUT, 1/4-20 UNC	13
17	065373-005	MAGNET	2
18	065373-006	SWITCH	2
19	067913-000	ALUM. SW. PAD	1
20	026551-005	RIVET 1/8 X 1/4 GRIP	8
23	063497-001	MERCURY SWITCH	2

ITEM	PART NO.	DESCRIPTION	QTY.
24	013919-013	CLAMP	2
25	014996-004	WASHER, 1/4 SAE FLAT	8
26	067866-002	SLIDE OUT DECK -REAR	1
27	013283-002	CABLE MOUNT	4
28	067482-000	OUTRIGGER INSTALLATION	1
29	012865-099	WIRE LOOM 3/4 DIA	8
30	067863-000	SWITCH MOUNT	1
31	00942-000	ORBIT LEVEL	1
32	064794-000	LEVEL MOUNT	1
34	067758-099	NYLON HOSE GUARD	11.67 FT
35	067699-000	HOSE CLAMP CHANNEL	2
40	014924-008	U-BOLT	2
41	011721-008	SCREW, RND HD, MACH., 4-40 X 1	3
42	005133-000	SPRING	3
44	011248-049	NUT, HEX, 4-40 ESNA	3
45	020398-012	CLAMP. CUSHIONED, Ø 1 1/2	5
47	068132-001	RELAY - 12 VDC	2
48	011826-006	SCREW - #10-32 x 3/4	2
49	011249-003	NUT - #10-32 HEX	2

NOTES:

1. HYDRAULIC PRESSURE SETTING
   FORWARD COUNTER BALANCE - 500 PSI
   REVERSE COUNTER BALANCE - 500 PSI
   DRIVE MOTOR RELIEF - 3000 PSI
   STEERING - 1500 PSI
2. ENGINE SPEED
   FULL THROTTLE - 3000 ±50 RPM
   IDLE SPEED - 1350 ±50 RPM
3. DRIVE SPEED
   SLOW - .30-.35 MPH (38-45 SEC. @ 20 FT.)
   HIGH - 2.9-3.1 MPH (4.4-4.7 SEC. @ 20 FT.)
4. LIFT SPEED
   UP - 90 SECONDS DOWN - 120 SECONDS
5. PROOF LOAD - 1125 LBS.
6. RATED LOAD - 750 LBS./340 KG.
7. GRADABILITY 24% MIN. (2900 LBS. DRAWBAR PULL)
8. CAUTION:
   MAKE SURE THAT PUMP IS FILLED WITH HYDRAULIC OIL PRIOR TO OPERATION, OR SERIOUS DAMAGE WILL OCCUR.
9. CHECK THAT POLYFILL TIRES ARE USED.
10. SET MERCURY SWITCH (DRIVE CUT-OUT) TO OPEN @ 8 METERS (26'-3") FOR EURO AND 40' FOR DOM.
11. SET MERCURY SWITCH (UP LIMIT) TO OPEN AT SPECIFIED DIMENSION TO PREVENT FULL EXTENSION OF LIFT CYL.
12. SWITCH TO OPEN LESS THAN 2 FT. PLATFORM LIFT.
13. BLEED AIR OUT OF BRAKES.

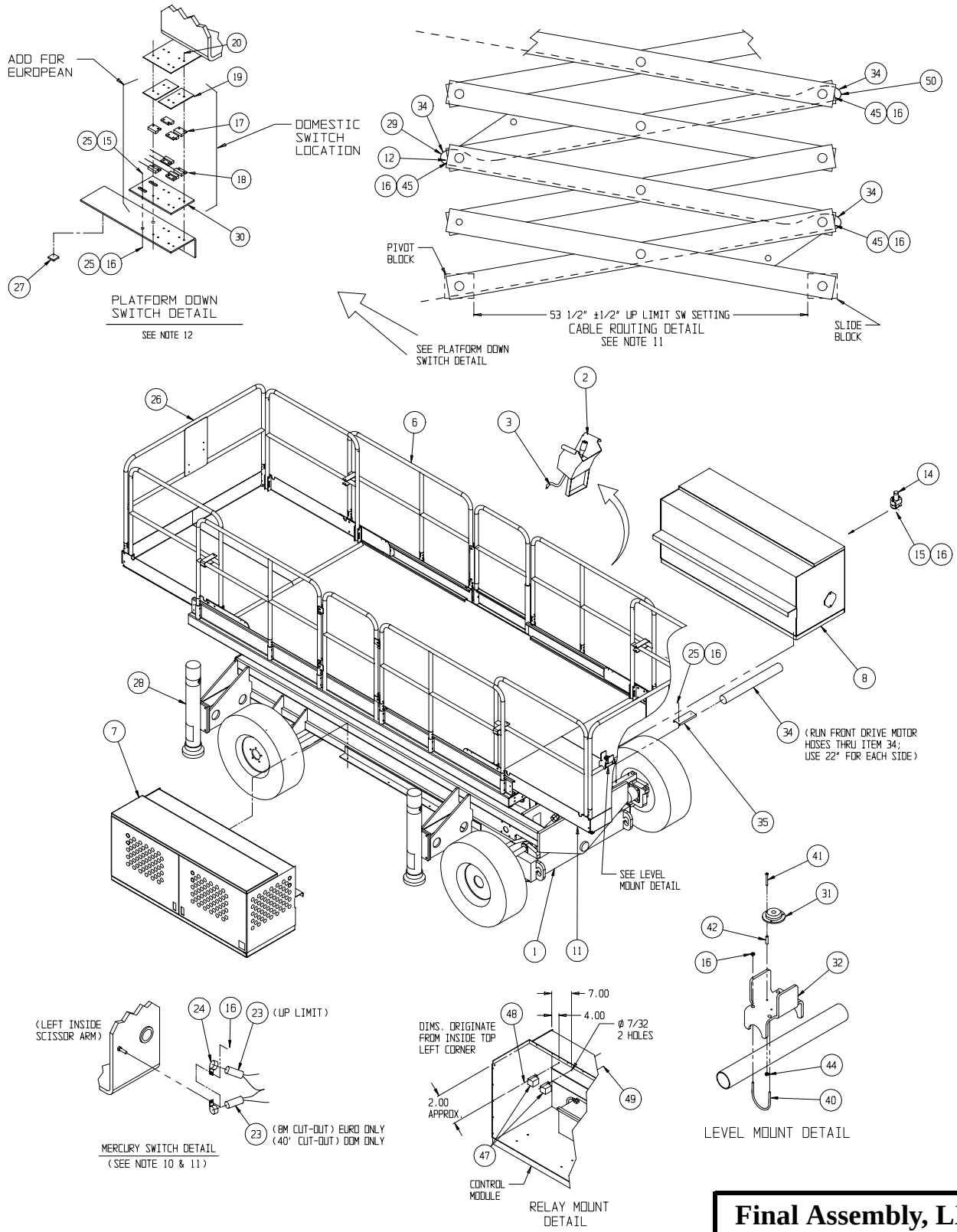

Final Assembly, LX50

Drawing 1 of 3

Final Assembly, LX50

Drawing 2 of 3

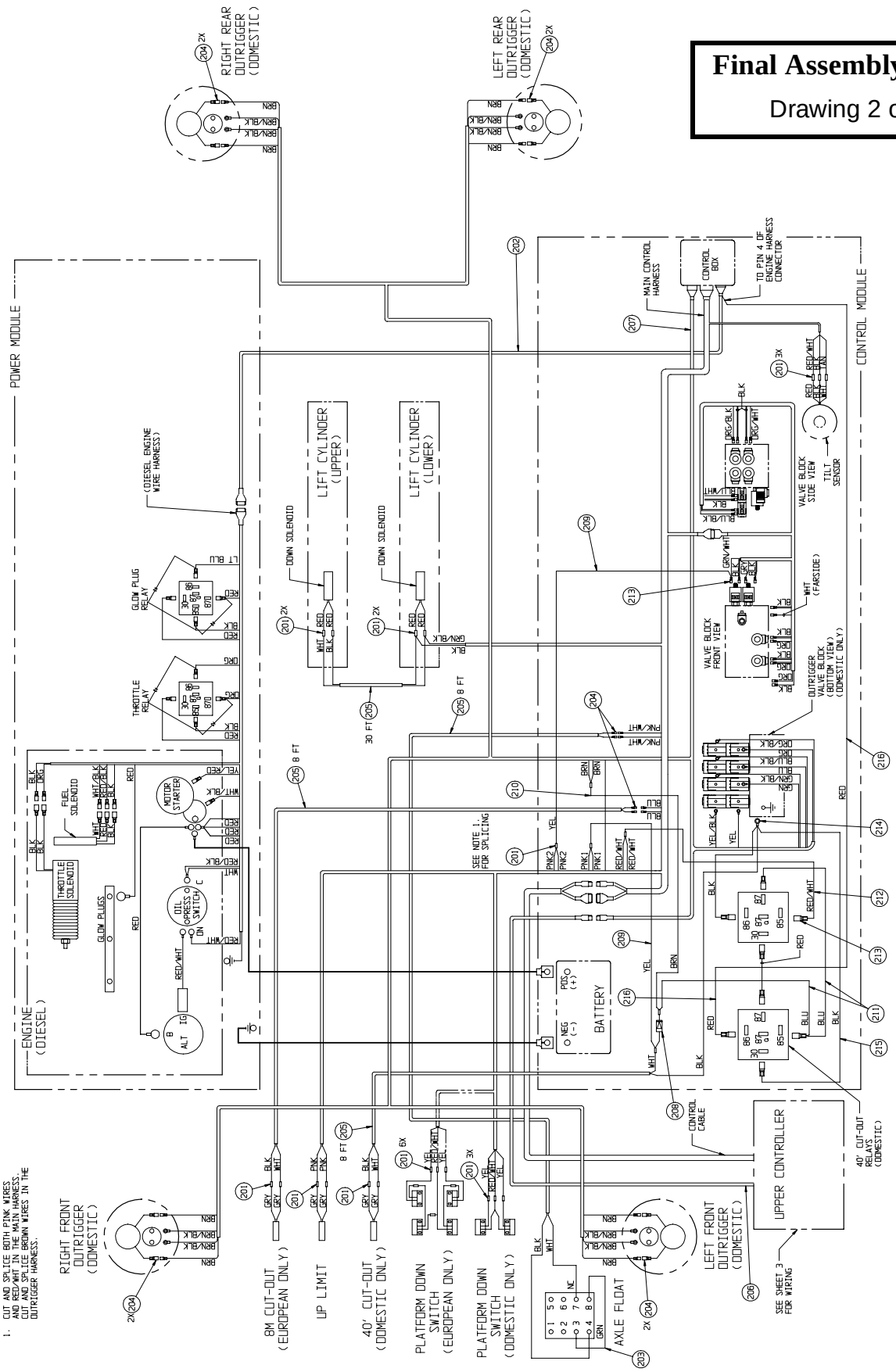

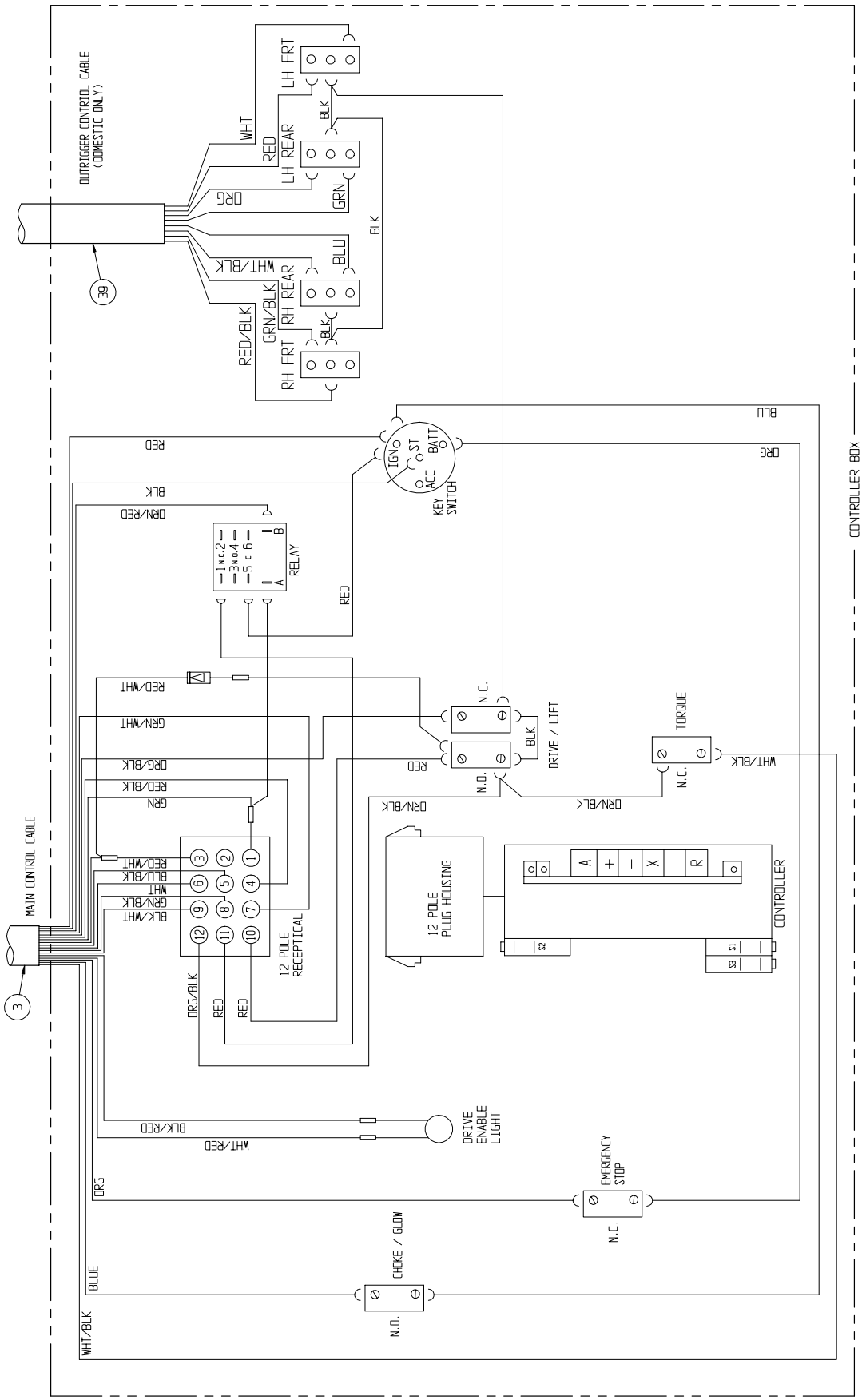

Final Assembly, LX50
Drawing 3 of 3

BASIC ASSEMBLY, LX50
TWO-WHEEL DRIVE, STANDARD DECK
067508-001

ITEM	PART NO.	DESCRIPTION	QTY.
1	067518-001	CHASSIS ASSEMBLY	1
2	067424-000	SCISSOR LINKAGE	1
3	067780-001	PLATFORM WELDMENT	1
4	067879-000	MOTOR COVER	2
5	011253-008	SCR HHC 5/16 X 1	8
6	067935-002	LADDER WELDMENT	1
7	067738-000	SLIDE BLOCK	6
8	067852-000	PIN	4
9	067853-000	PIN	2
10	014996-005	WASHER 5/16 DIA	8
11	066189-000	SPACER 1/4	4
12	067853-001	PIN	2
13	066189-004	SPACER 1/8	8
14	011248-008	NUT 1/2-13 ESNA	16
15	011256-012	SCREW HHC 1/2-13 X 1 1/2	4
16	011296-028	SCREW SHC 1/2-13 X 3 1/2	8
17	014033-032	SCREW HHC 1/2-13 X 4 GR.8	8

BASIC ASSEMBLY, LX50
FOUR-WHEEL DRIVE, STANDARD DECK
067509-001

ITEM	PART NO.	DESCRIPTION	QTY.
1	067519-001	CHASSIS ASSEMBLY	1
2	067424-000	SCISSOR LINKAGE	1
3	067780-001	PLATFORM WELDMENT	1
4	067879.000	MOTOR COVER	2
5	011253-008	SCR HHC 5/16 X 1	8
6	067935-002	LADDER WELDMENT	1
7	067738-000	SLIDE BLOCK	6
8	067852-000	PIN	4
9	067853-000	PIN	2
10	014996-005	WASHER 5/16 DIA	8
11	066189-000	SPACER 1/4	2
12	067853-001	PIN	2
13	066189-004	SPACER 1/8	8
14	011248-008	NUT 1/2-13 ESNA	16
15	011256-012	SCREW 1/2-13 X 1 1/2	4
16	011296-028	SCREW SHC 1/2-13 X 3 1/2	8
17	014033-032	SCREW HHC 1/2-13 X 4	8

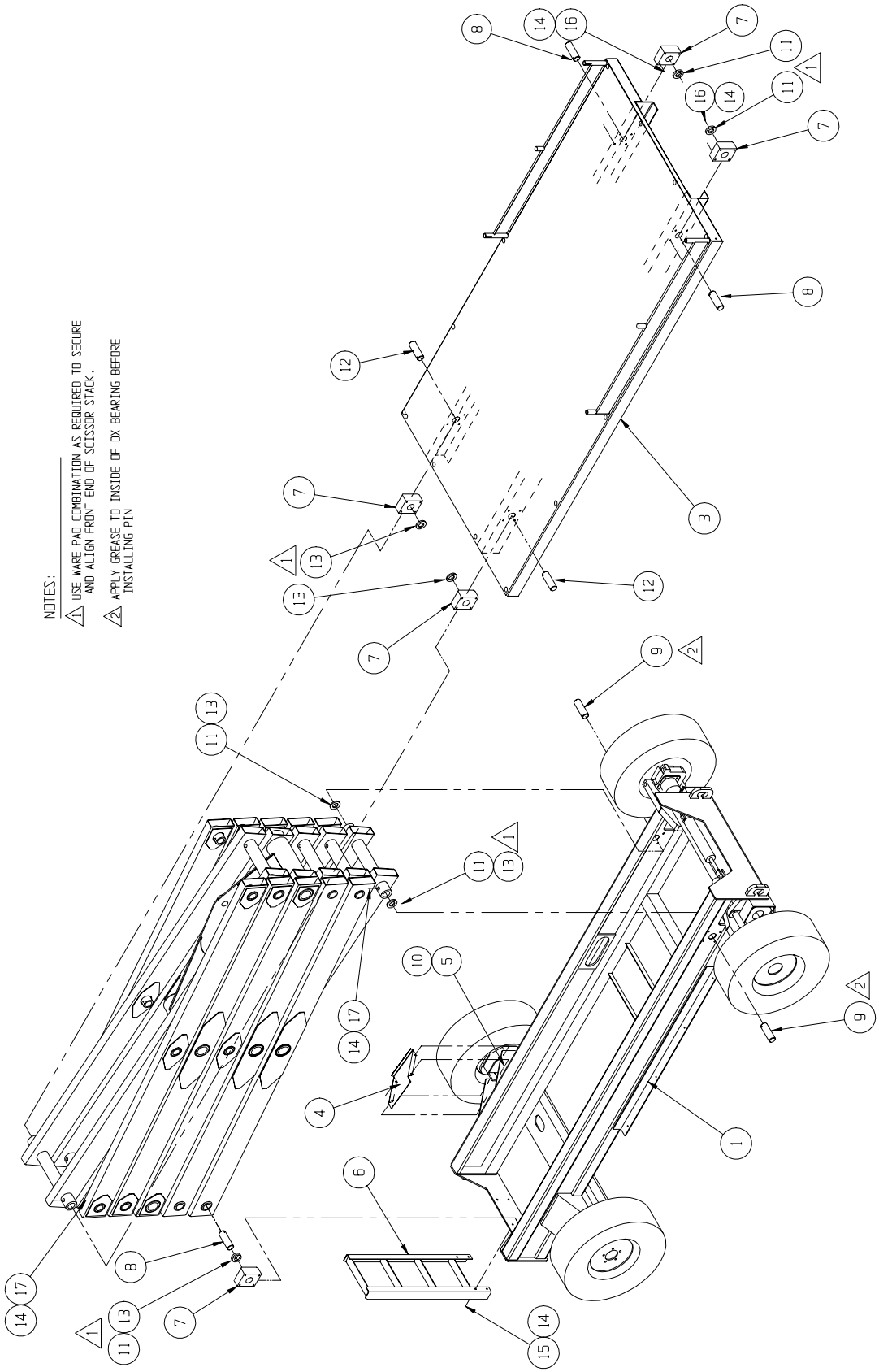
NOTES:
1 USE WARE PAD COMBINATION AS REQUIRED TO SECURE AND ALIGN FRONT END OF SCISSOR STACK.
2 APPLY GREASE TO INSIDE OF DX BEARING BEFORE INSTALLING PIN.

BASIC ASSEMBLY, LX50 TWO-WHEEL DRIVE, DUAL DECK

067419-000

ITEM	PART NO.	DESCRIPTION	QTY.
1	067518-001	CHASSIS ASSEMBLY	1
2	067424-000	SCISSOR LINKAGE	1
3	030841-101	PLATFORM WELDMENT	1
4	067879-000	MOTOR COVER	2
5	011253-008	SCR HHC 5/16 X 1	8
7	067738-000	SLIDE BLOCK	6
8	067852-000	PIN	4
9	067853-000	PIN	2
10	014996-005	WASHER 5/16 DIA	8
11	066189-000	SPACER 1/4	4
12	067853-001	PIN	2
13	066189-004	SPACER 1/8	8
16	011296-028	SCREW SHC 1/2-13 X 3 1/2	8
17	014033-032	SCREW HHC 1/2-13 X 4 GR.8	8
20	011248-008	NUT 1/2-13 ESNA	12

BASIC ASSEMBLY, LX50 FOUR-WHEEL DRIVE, DUAL DECK

067420-000

ITEM	PART NO.	DESCRIPTION	QTY.
1	067519-001	CHASSIS ASSEMBLY	1
2	067424-000	SCISSOR LINKAGE	1
3	030841-101	PLATFORM WELDMENT	1
4	067879.000	MOTOR COVER	2
5	011253-008	SCR HHC 5/16 X 1	8
7	067738-000	SLIDE BLOCK	6
8	067852-000	PIN	4
9	067853-000	PIN	2
10	014996-005	WASHER 5/16 DIA	8
11	066189-000	SPACER 1/4	2
12	067853-001	PIN	2
13	066189-004	SPACER 1/8	8
16	011296-028	SCREW SHC 1/2-13 X 3 1/2	8
17	014033-032	SCREW HHC 1/2-13 X 4	8
20	011248-008	NUT 1/2-13 ESNA	12

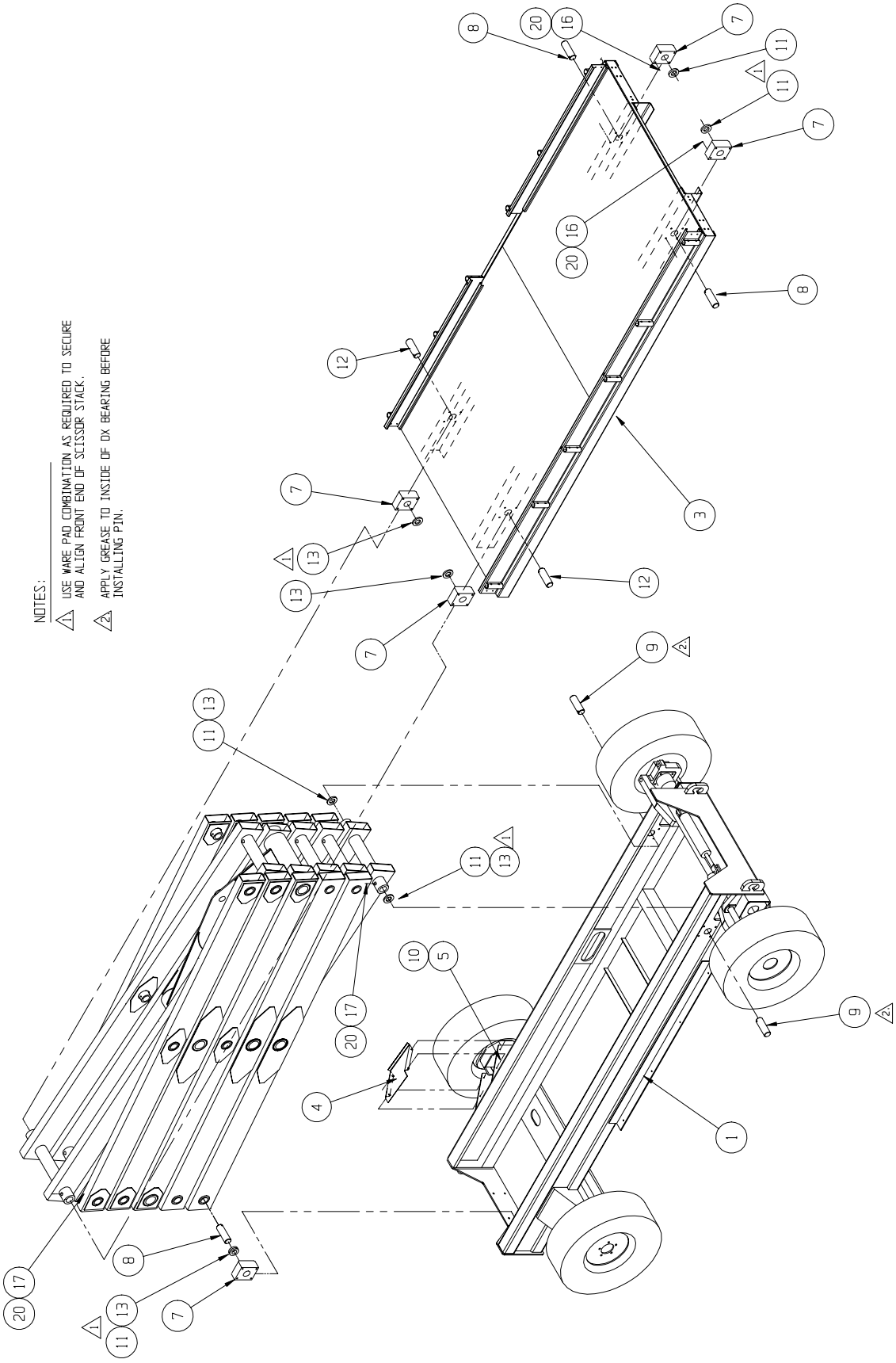
NOTES:
1 USE WARE PAD COMBINATION AS REQUIRED TO SECURE AND ALIGN FRONT END OF SCISSOR STACK.
2 APPLY GREASE TO INSIDE OF DX BEARING BEFORE INSTALLING PIN.

CHASSIS ASSEMBLY, LX50
TWO-WHEEL DRIVE
067518-001

ITEM	PART NO.	DESCRIPTION	QTY.
1	067715-000	CHASSIS WELDMENT (FIXED AXLE)	1
2	067743-000	TRUNNION (L.H.)	1
3	067742-000	TRUNNION (R.H.)	1
4	067739-000	STEERING LINK	1
5	067812-000	BUSHING, STEERING	2
6	067813-000	CONNECTING LINK	2
7	067746-000	TRUNNION PIN LOWER	2
8	067833-000	SPINDLE WELDMENT	2
9	067748-000	STEERING CLAMP	1
11	067816-000	PLATE WELDMENT	1
12	067613-000	HUB, 8 BOLT ON 8” B.C.	2
*	067613-010	GREASE SEAL	1
*	067613-011	INNER CUP	1
*	067613-012	OUTER CUP	1
*	067613-013	INNER CONE	1
*	067613-014	OUTER CONE	1
*	067613-015	DUST CAP	1
*	067613-016	STUD	1
13	067600-000	TORQUE HUB	2
*	067600-010	BEARING	2
*	067600-011	SHAFT SEAL	2
*	067600-012	STUD	10
*	067600-013	0-RING	2
14	067603-000	BRAKE	2
*	067603-010	BRAKE SEAL KIT	-
15	067601-001	HYDRAULIC MOTOR	2
*	067601-010	HYDRAULIC MOTOR SEAL KIT	-
16	067633-000	STEERING CYLINDER	1
*	067633-010	STEERING CYLINDER SEAL KIT	-
17	011252-020	SCREW HHC 1/4-20 X 2 1/2	4
19	011248-004	NUT 1/4-20 HEX ESNA	4
20	067606-020	BEARING, SCISSOR PIVOT	2
21	062642-020	BUSHING 16DU16	4
22	062649-020	BEARING, STEERING ROD	2
23	067606-010	BEARING, 16DX16	6
24	067665-002	TIRE & WHEEL ASSY FRONT RHD	1
25	067665-003	TIRE & WHEEL ASSY FRONT LHD	1

ITEM	PART NO.	DESCRIPTION	QTY.
26	011254-020	SCREW HHC 3/8-16 X 2 1/2	6
27	011248-006	NUT 3/8-16 HEX ESNA	6
28	011258-012	SCREW HHC 3/4-10 X 1 1/2	4
29	011238-008	WASHER 1/2 SPLIT LOCK	33
30	011256-012	SCREW HHC 1/2-13 X 1 1/2	16
31	011257-028	SCREW HHC 5/8-11 X 3 1/2	2
32	011248-008	NUT 1/2-13 HEX ESNA	10
33	011256-024	SCREW HHC 1/2-13 X 3	8
34	011848-050	PIN CLEVIS 1 X 2 3/4	1
35	067746-001	PIN STEERING LINK	2
36	011256-020	SCREW HHC 1/2-13 X 2 1/2	2
37	013315-011	RETAINING “E” RING	2
38	062889-012	PIN, HAIR COTTER .177 X 3 1/2	2
39	011935-006	FITTING 10 MB - 10 MJ 45°	2
40	011469-005	LUG NUT 9/16-18	10
41	011934-011	FITTING, 10 MB - 10 MJ 90°	4
42	011934-001	FITTING, 4 MB - 4 MJ 90°	3
43	011934-003	FITTING, 6 MB - 4 MJ 90°	2
44	012030-010	SCRW SOC HD CAP 1/2-13 X 1-1/4	8
45	011848-051	PIN CLEVIS 1 DIA. X 2	1
46	063978-000	HAND PUMP	1
47	011240-006	WASHER 3/8 STD	2
48	012877-008	VALVE, BI DIRECTIONAL RELIEF	2
49	012030-032	SCRW SOC HD CAP 1/2-13 X 4	4
50	067746-002	PIN TRUNNION UPPER	2
51	067666-002	TIRE/WHEEL ASSY REAR RHD	1
52	067666-003	TIRE/WHEEL ASSY REAR LHD	1
53	011941-001	FITTING 4MB-4MJ STR	1
54	011238-012	WASHER SPLIT LOCK 3/4	4
55	064279-000	THRUST WASHER	2
56	011248-010	NUT 5/8-11 HEX ESNA	2
57	067805-099	GROMMET MATL	FT 7.00
58	024501-003	SHEET 1/8 RUBBER 3 X 48	1
59	020495-009	NUT HEX JAM 9/16-18UNF	1
60	067961-000	VALVE POPET N.C.	1
61	011937-003	FITTING 6FJX-6MJ 90	1

*Not Shown

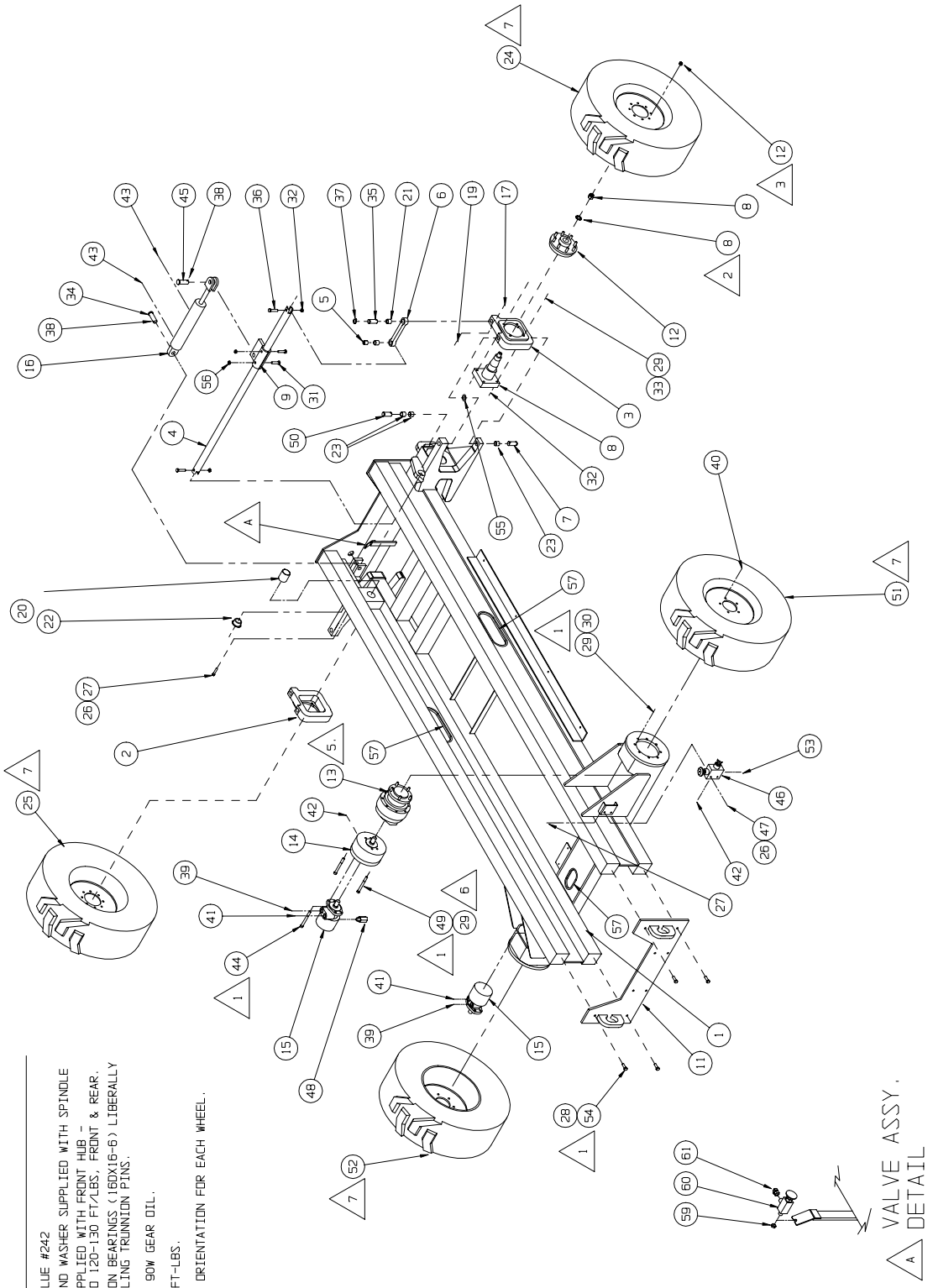

NOTES:

1. USE LOCTITE BLUE #242
2. SPINDLE NUT AND WASHER SUPPLIED WITH SPINDLE
3. WHEEL NUTS SUPPLIED WITH FRONT HUB - TORQUE NUTS TO 120-130 FT/LBS, FRONT & REAR.
4. GREASE TRUNNION BEARINGS (16DX16-6) LIBERALLY BEFORE INSTALLING TRUNNION PINS.
5. FILL WITH SAE 90W GEAR OIL.
6. TORQUE TO 75 FT-LBS.
7. NOTE TIRE LUG ORIENTATION FOR EACH WHEEL.

CHASSIS ASSEMBLY, LX50
FOUR-WHEEL DRIVE
067519-001

ITEM	PART NO.	DESCRIPTION	QTY.
1	067729-000	CHASSIS WELDMENT	1
2	067700-000	AXLE WELDMENT	1
3	067743-000	TRUNNION (L.H.)	1
4	067742-000	TRUNNION (R.H.)	1
5	067739-000	STEERING LINK	1
6	067812-000	BUSHING, STEERING	2
7	067813-000	CONNECTING LINK	2
8	067746-000	TRUNNION PIN	2
9	067814-000	PIVOT SHAFT, FRONT AXLE	1
10	067748-000	STEERING CLAMP	1
11	011238-012	LOCKWASHER SPLIT 3/4	4
12	067816-000	PLATE WELDMENT	1
13	067607-002	HYDRAULIC MOTOR (FRONT)	2
14	067600-000	TORQUE HUB	2
*	067600-010	BEARING	2
*	067600-011	SHAFT SEAL	2
*	067600-012	STUD	10
*	067600-013	0-RING	2
15	067603-000	BRAKE	2
*	067603-010	BRAKE SEAL KIT	-
16	067601-001	HYDRAULIC MOTOR	2
*	067601-010	HYDRAULIC MOTOR SEAL KIT	-
17	067633-000	STEERING CYLINDER	1
*	067633-010	STEERING CYLINDER SEAL KIT	-
18	067634-000	AXLE PIVOT CYLINDER	1
*	067634-010	AXLE PIVOT CYLINDER SEAL KIT	-
19	067637-000	PIVOT BUSHING	2
20	027931-057	BEARING, PIVOT CYL.	2
21	067606-020	BEARING, SCISSOR PIVOT	2
22	064298-004	BEARING, AXLE PIVOT	2
23	062649-020	BEARING, STEERING ROD	2
24	067606-010	BEARING 16DX16	6
25	067666-002	TIRE & WHEEL - RH	1
26	067666-003	TIRE & WHEEL - LH	1
27	067664-002	TIRE & WHEEL - RH 4WD FRONT	1
28	067664-003	TIRE & WHEEL - LH 4WD FRONT	1
29	011252-020	SCREW, HHC 1/4-20UNC X 2-1/2	6
30	011248-004	NUT, HEX 1/4-20 ESNA	6
31	062642-020	BEARING, 16 DU 12	4
32	067746-001	STEERING LINK PIN	2
33	011254-020	SCREW, HHC 3/8-16UNC X 2-1/2	6
34	011248-006	NUT, HEX 3/8-16UNC ESNA	6
35	062889-012	PIN, HAIR COTTER .177 X 3-1/2	2
36	011848-050	PIN, CLEVIS 1 X 2-3/4	1
37	013315-011	RETAINING "E" RING	2
38	011256-020	SCREW, HHC 1/2-13UNC X 2-1/2	2
39	011248-008	NUT, HEX 1/2-13UNC ESNA	19

ITEM	PART NO.	DESCRIPTION	QTY.
40	011256-028	SCREW, HHC 1/2-13UNC X 3-1/2	2
41	011256-012	SCREW, HHC 1/2-13UNC X 1-1/2	17
42	011238-008	LOCKWASHER, SPLIT 1/2	37
43	011249-016	LOCKNUT, HEX 1-14UNF ESNA	4
44	011297-016	WASHER, BELL 1"	4
45	064370-001	CYLINDER PIN 1 X 5-1/4	2
46	011258-012	SCREW, HHC 3/4-10UNC X 1-1/2	4
47	012030-032	SCREW, SOC HD 1/2-13UNC X 4	8
48	011469-005	LUG NUT, 9/16-18 90°	10
49	012004-004	FITTING, PLUG SAE#4	4
50	015961-004	FITTING, TEE 4MB - 4MJ - 4MJ	2
51	011934-001	FITTING, 90° 4MB - 4MJ	7
52	011937-001	FITTING, 90° 4FJX - 4MJ	2
53	015961-010	FITTING, TEE 10MB - 10MJ-10MJ	1
54	010150-005	FITTING, BULKHD. 8MJ - 8MJ	4
55	011941-014	FITTING, 12MB - 8MJ	2
56	011935-006	FITTING, 45° 10MB - 10MJ	2
57	011934-011	FITTING, 90° 10MB - 10MJ	1
58	011934-003	FITTING, 90° 6MB - 4MJ	2
59	012030-010	SCREW SOC HD 1/2-13 X 1-1/4	8
60	067878-000	AXLE COVER 4WD	1
61	067674-008	FITTING 45° 12MB - 8MJ	4
62	064296-003	LIMIT SWITCH	1
63	064294-004	CLAMP LEVER	1
64	012002-010	FITTING 10MJ - 10MJ 90°	4
65	064297-001	CHECK VALVE	2
66	011848-051	CLEVIS PIN 1" DIA. X 2"	1
67	063978-000	PUMP HAND (BRAKE)	1
68	011240-006	WASHER 3/8 STD	2
69	012877-008	VALVE BI-DIRECTIONAL RELIEF	2
71	011709-018	SCREW MACH RD HD 10-24 X 2-1/4	4
72	011248-003	NUT HEX ESNA 10-24	4
73	067746-002	TRUNNION PIN UPPER	2
74	011935-003	FITTING 6MB - 6MJ 45°	1
75	011941-005	FITTING 6MB - 6MJ STR	1
76	011252-004	SCREW HHC 1/4-20 X 1/2	2
77	011240-004	WASHER 1/4 FLAT STD	2
78	064279-000	THRUST WASHER	2
79	067805-099	GROMMET MATL	FT 7.00
80	024501-003	SHEET 1/8 RUBBER 3 X 48	1
81	013336-003	FITTING LUBE	4
82	020495-009	NUT HEX JAM 9/16-18UNF	1
83	067961-000	VALVE POPET N.C.	1
84	011937-003	FITTING 6FJX-6MJ 90	1
85	067865-000	WHEEL HUB	2
86	014122-001	WHEEL BOLT	12
87	012030-024	SCREW SOC HD 1/2-13 X 3	8

*Not Shown

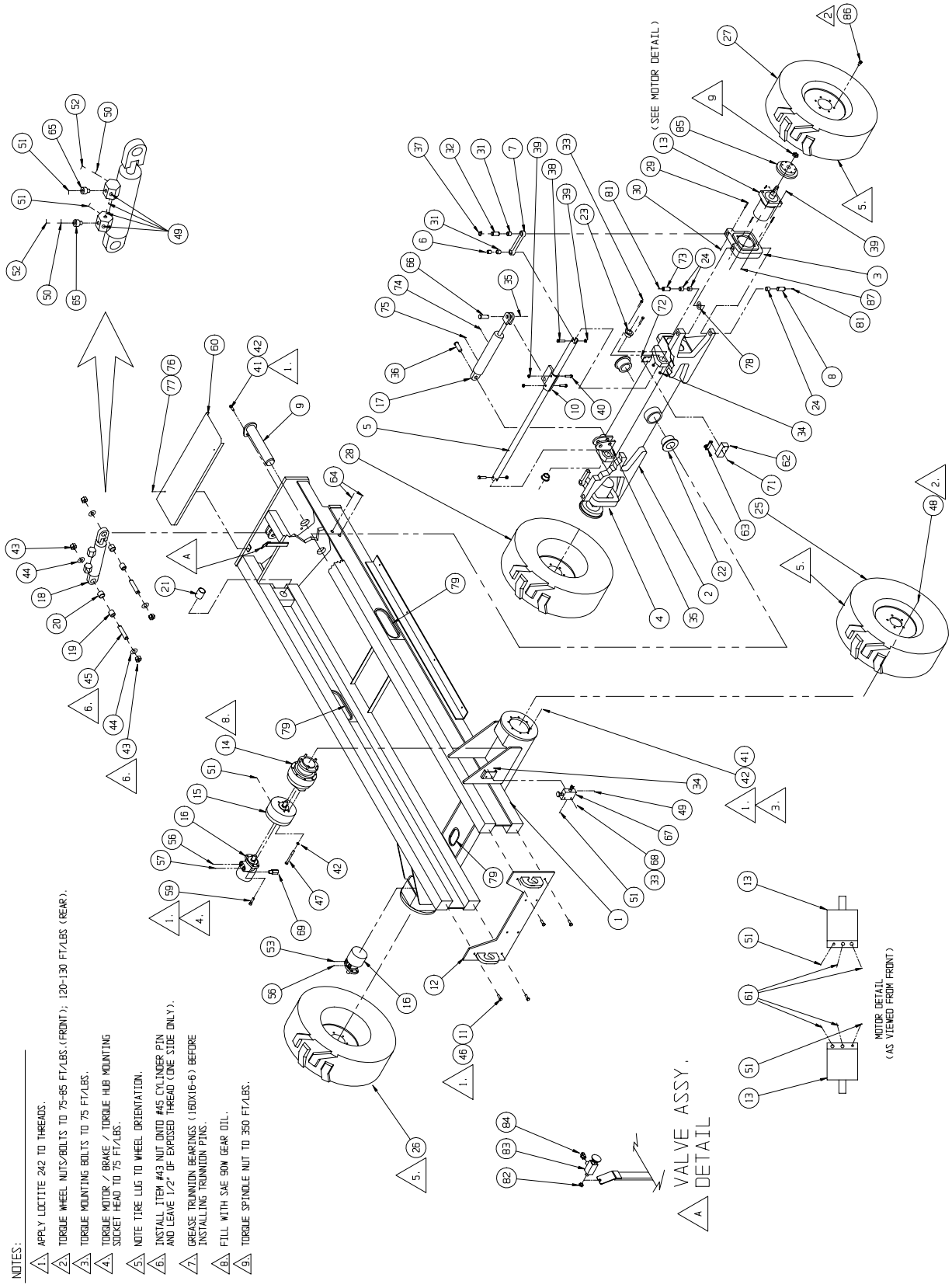
NOTES:
1. APPLY LOCTITE 242 TO THREADS.
2. TORQUE WHEEL NUTS/BOLTS TO 75-85 FT/LBS.(FRONT); 120-130 FT/LBS (REAR).
3. TORQUE MOUNTING BOLTS TO 75 FT/LBS.
4. TORQUE MOTOR / BRAKE / TORQUE HUB MOUNTING SOCKET HEAD TO 75 FT/LBS.
5. NOTE TIRE LUG TO WHEEL ORIENTATION.
6. INSTALL ITEM #43 NUT ONTO #45 CYLINDER PIN AND LEAVE 1/2" OF EXPOSED THREAD (ONE SIDE ONLY).
7. GREASE TRUNNION BEARINGS (16DX16-6) BEFORE INSTALLING TRUNNION PINS.
8. FILL WITH SAE 90W GEAR OIL.
9. TORQUE SPINDLE NUT TO 350 FT/LBS.
(SEE MOTOR DETAIL)
VALVE ASSY. DETAIL
MOTOR DETAIL (AS VIEWED FROM FRONT)

SCISSOR LINKAGE ASSEMBLY, LX50

067424-000

ITEM	PART NO.	DESCIPTION	QTY.
1	067968-001	ARM WELDMENT	1
2	067969-001	ARM WELDMENT	1
3	067970-000	ARM WELDMENT	1
4	067971-001	ARM WELDMENT	2
5	067972-001	ARM WELDMENT	1
6	067973-000	ARM WELDMENT	2
7	067974-000	ARN WELDMENT	1
8	067975-000	ARM WELDMENT	2
9	067557-000	ARM WELDMENT	1
10	067606-020	BEARING, 2” I.D. X 1 1/2” LG.	44
11	067606-030	BEARING, 3” I.D. X 1 1/2” LG.	8
12	067583-000	PIN WELDMENT	20
13	067580-000	PIN WELDMENT	4
14	067585-000	PIN WELDMENT	2
15	067586-000	PIN, CYLINDER	4
16	067635-005	LIFT CYLINDER	1
*	067635-015	LIFT CYLINDER SEAL KIT	-
17	014033-048	SCREW 1/2-13 UNC X 6 GR. 8	42
18	014033-032	SCREW HHC 1/2-13 UNC X 4 GR. 8	12
19	011248-008	HEX LOCK NUT 1/2-13 UNC	26
20	067591-000	SUPPORT WELDMENT	2
21	013336-001	GREASE FITTING	26
22	011941-005	STRAIGHT ADAPTER #6	2

ITEM	PART NO.	DESCIPTION	QTY.
23	060291-000	DOWN VALVE	2
24	003570-001	RETAINING PIN ASSLY	1
25	067556-000	ARM WELDMENT	1
26	067976-001	ARM WELDMENT	1
27	015919-006	ORIFICE PLATE	2
28	005133-000	SPRING	2
29	011786-017	MACHINERY BUSHING, 2” ID X 14 GA.	2
30	011757-028	COTTER PIN 3/8 DIA X 3-1/2	2
31	014693-005	FITTING 10FJ-6MJ	2
32	067981-000	FITTING	2
33	067635-004	LIFT CYLINDER	1
*	067635-014	LIFT CYLINDER SEAL KIT	-
34	011256-036	SCREW HHC 1/2-13UNC X 4 1/2	10
35	011248-004	NUT HEX ESNA 1/4-20UNC	2
36	011252-036	SCREW HEX 1/4-20UNC X 4 1/2	2
37	067979-000	SCISSOR BRACE CONNECTOR WELDMENT	1

*Not Shown

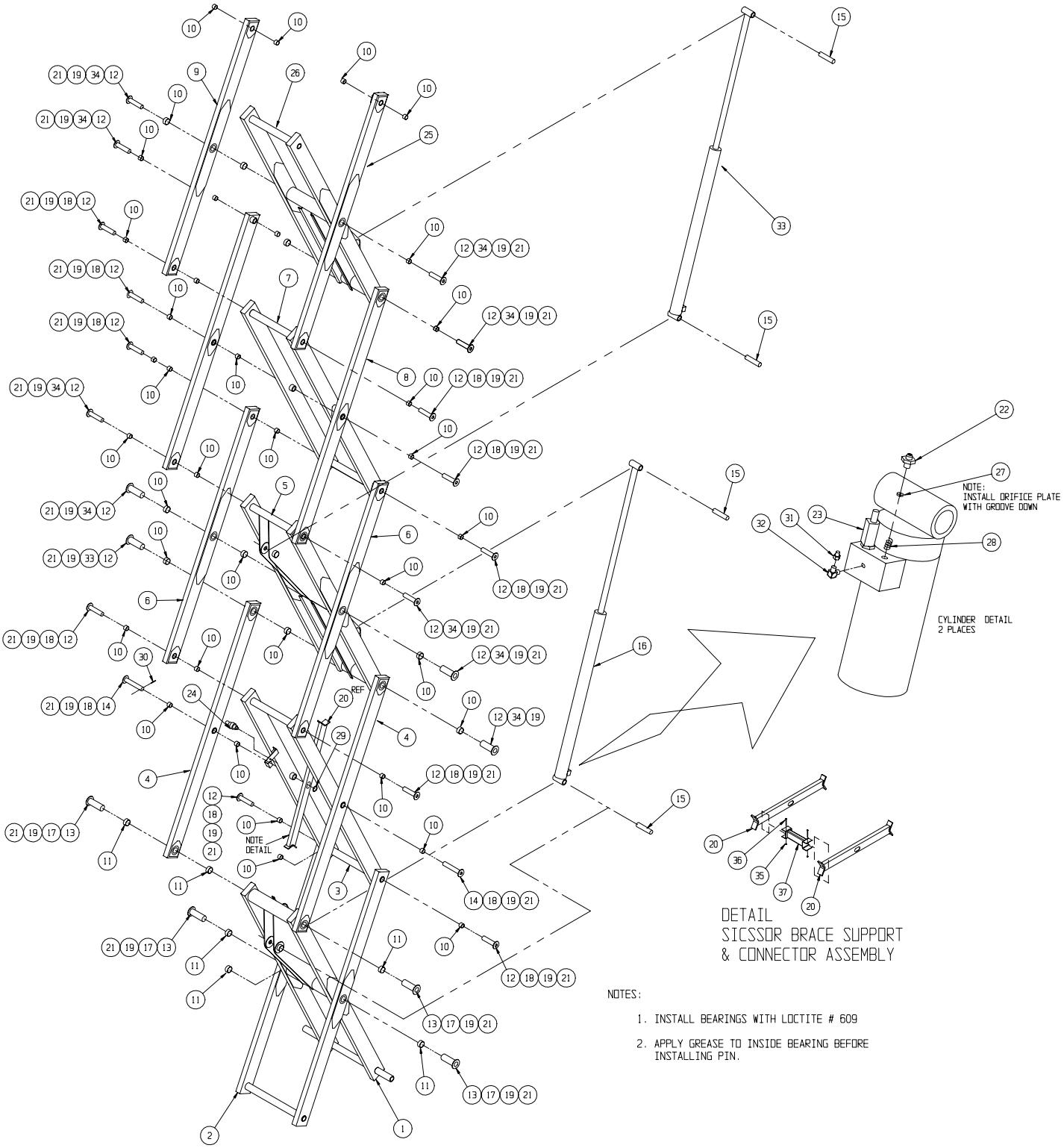
NOTE:
INSTALL ORIFICE PLATE
WITH GROOVE DOWN
CYLINDER DETAIL
2 PLACES
NOTE
DETAIL
REF
DETAIL
SICSSOR BRACE SUPPORT
& CONNECTOR ASSEMBLY
NOTES:
1. INSTALL BEARINGS WITH LOCTITE # 609
2. APPLY GREASE TO INSIDE BEARING BEFORE
INSTALLING PIN.

CONTROLLER ASSEMBLY, LX50 W/O OUTRIGGERS

067528-010

ITEM	PART NO.	DESCRIPTION	QTY.
1	067487-000	LX CONTROL BOX	1
2	067643-001	CONTROLLER, PROPORTIONAL 12V	1
*	015772-001	SWITCH, MICRO	1
*	066544-014	SWITCH, STEERING	1
*	063913-003	BOOT, STEERING SWITCH	2
*	063913-004	ROCKER ASSEMBLY	1
*	066544-010	HANDLE, 2 PIECE	1
*	066544-011	LEVER, INTERLOCK	1
*	066544-012	SWITCH, INTERLOCK	1
*	066544-013	BOOT, JOYSTICK SHAFT	1
*	066544-015	FLANGE, CONTROLLER MOUNTING	1
3	067486-000	COVER PLATE, CONTROLLER BOX	1
4	067483-000	CONTROLLER SUPPORT	1
5	029925-011	CABLE CONNECTOR, 3/4”	1
6	064443-002	CONTACT BLOCK, N.C.	3
7	064443-001	CONTACT BLOCK, N.O.	2
8	064666-000	KEY SWITCH	1
*	063936-015	KEY ONLY	1
9	067657-000	SELECTOR SWITCH	2
10	067653-000	PUSH BUTTON	1
11	064446-003	MUSHROOM BUTTON	1
12	068133-000	INDICATOR LIGHT	1

ITEM	PART NO.	DESCRIPTION	QTY.
13	067806-000	RING, RETAINING	1
14	063951-001	RELAY	1
15	029939-003	CONDUIT NUT, 3/4”	1
16	011248-047	LOCKNUT, #6-32	2
17	011715-004	SCREW, #6-32 X 1/2	2
18	064417-001	MOUNTING LATCH	4
19	064462-007	CAP PLUG Ø 7/8	2
20	011252-006	SCREW, 1/4-20 UNC, HEX HD CAP X 3/4	2
21	011248-004	LOCKNUT, 1/4-20 UNC, HEX	2
22	064462-002	CAP PLUG Ø 1/2”	4
23	101158-099	O-RING, Ø 3/32	3 FT.
24	010952-004	SCREW, BUTT. HD, TORX, 10-24 UNC X 1/2	6
100	029610-004	CONNECTOR FORK TERM 12-10 GA. #10	11
102	029615-002	CONNECTOR FEMALE PUSH 16-14 GA.	2
103	063956-003	PLUG, HOUSING	1
104	063956-010	PIN, CONTACT MALE	3
105	029452-099	WIRE 16 GA. BLACK	2 FT
106	029450-099	WIRE 16 GA. BLUE	3 FT
108	029453-099	WIRE 16 GA. ORG	1 FT
109	029477-099	WIRE 16 GA. ORG/BLK	1 FT
110	029454-099	WIRE 16 GA. RED	2 FT

*Not Shown

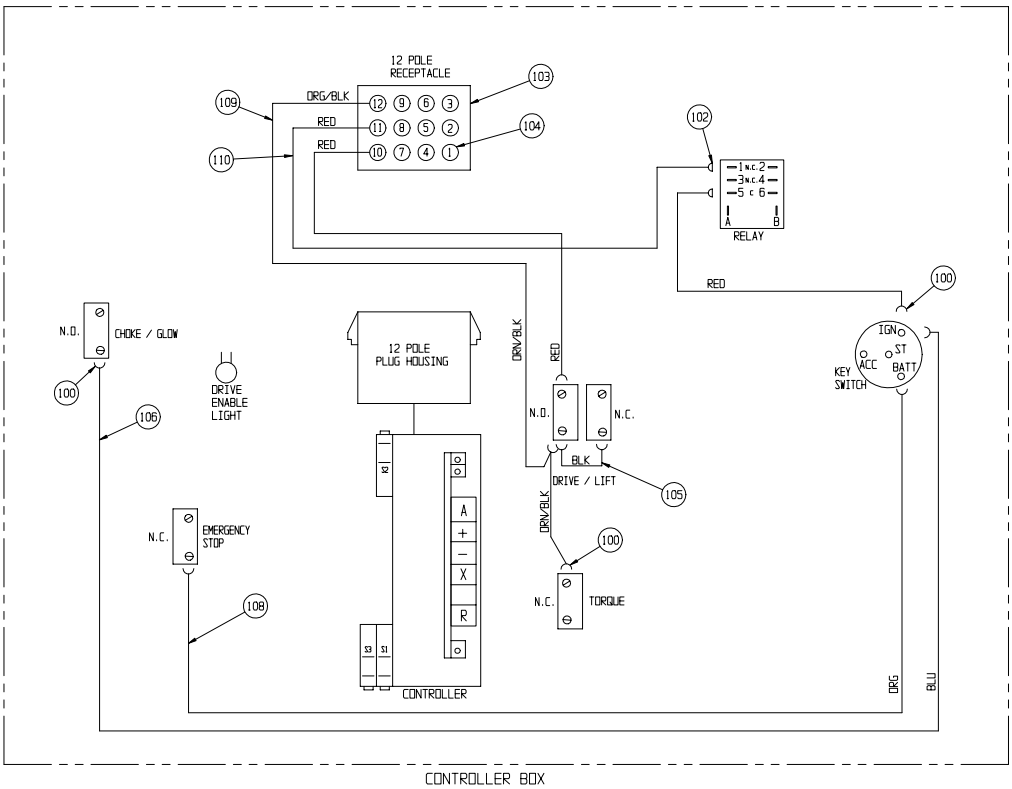

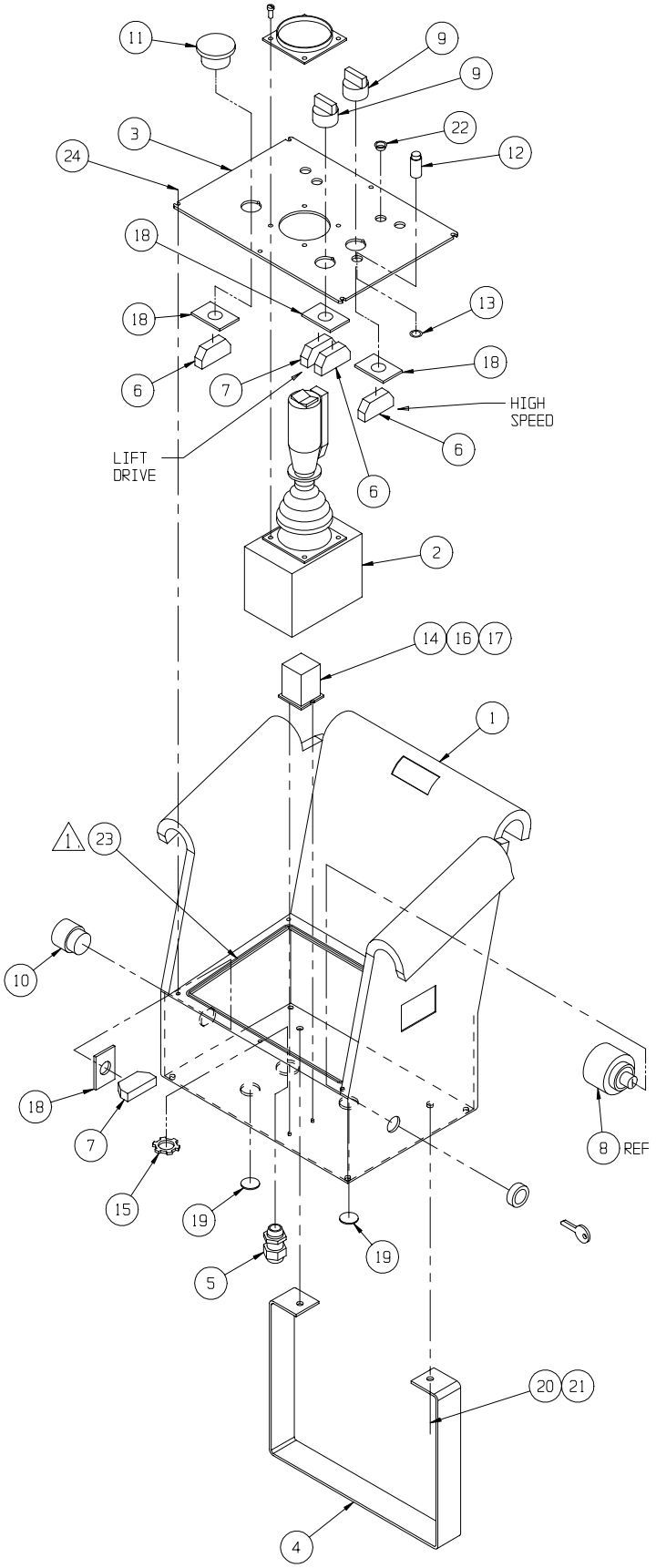
11
9
9
22
12
3
24
18
13
18
18
6
7
HIGH SPEED
6
LIFT DRIVE
6
2
14
16
17
1
1
23
10
18
7
8
REF
15
19
19
5
20
21
4

CONTROLLER ASSEMBLY, LX50 w/ OUTRIGGERS

067528-011

ITEM	PART NO.	DESCRIPTION	QTY.
1	067487-000	LX CONTROL BOX	1
2	067643-001	CONTROLLER, PROPORTIONAL 12V	1
3	067486-000	COVER PLATE, CONTROLLER BOX	1
4	067483-000	CONTROLLER SUPPORT	1
5	029925-011	CABLE CONNECTOR, 3/4”	1
6	064443-002	CONTACT BLOCK, N.C.	3
7	064443-001	CONTACT BLOCK, N.O.	2
8	064666-000	KEY SWITCH	1
9	067657-000	SELECTOR SWITCH	2
10	067653-000	PUSH BUTTON	1
11	064446-003	MUSHROOM BUTTON	1
12	068133-000	INDICATOR LIGHT	1
13	067806-000	RING, RETAINING	1
14	063951-001	RELAY	1
15	029939-003	CONDUIT NUT, 3/4”	1
16	011248-047	LOCKNUT, #6-32	2
17	011715-004	SCREW, #6-32 X 1/2	2
18	064417-001	MOUNTING LATCH	4

ITEM	PART NO.	DESCRIPTION	QTY.
19	064462-007	CAP PLUG Ø 7/8	1
20	011252-006	SCREW, 1/4-20 UNC, HEX HD CAP X 3/4	2
21	011248-004	LOCKNUT, 1/4-20 UNC, HEX	2
22	012798-000	TOGGLE SWITCH SPOT-MOMENTARY	4
23	101158-099	O-RING, Ø 3/32	3 FT.
24	010952-004	SCREW, BUTT. HD, TORX, 10-24 UNC X 1/2	6
25	029872-000	SWITCH BOOT	4
26	029925-000	CABLE CONNECTOR, 1/2, NPT	1
27	029939-002	NUT, LOCK, 1/2, NPT	1
100	029610-004	CONNECTOR FORK TERM 12-10 GA. #10	16
102	029615-002	CONNECTOR FEMALE PUSH 16-14 GA.	2
103	063956-003	PLUG, HOUSING	1
104	063956-010	PIN, CONTACT MALE	3
105	029452-099	WIRE 16 GA. BLACK	2 FT
106	029450-099	WIRE 16 GA. BLUE	3 FT
108	029453-099	WIRE 16 GA. ORG	1 FT
109	029477-099	WIRE 16 GA. ORG/BLK	1 FT
110	029454-099	WIRE 16 GA. RED	2 FT

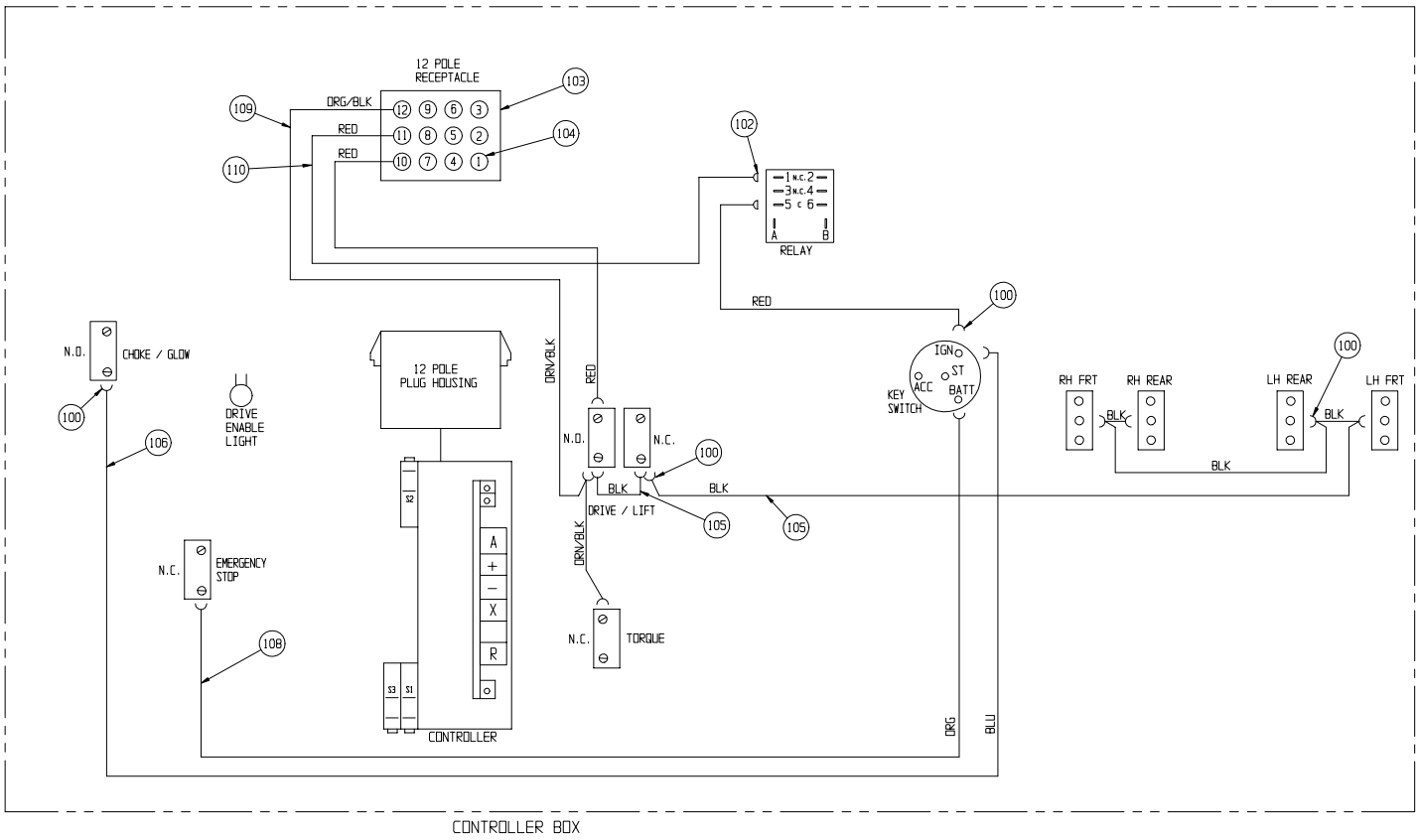

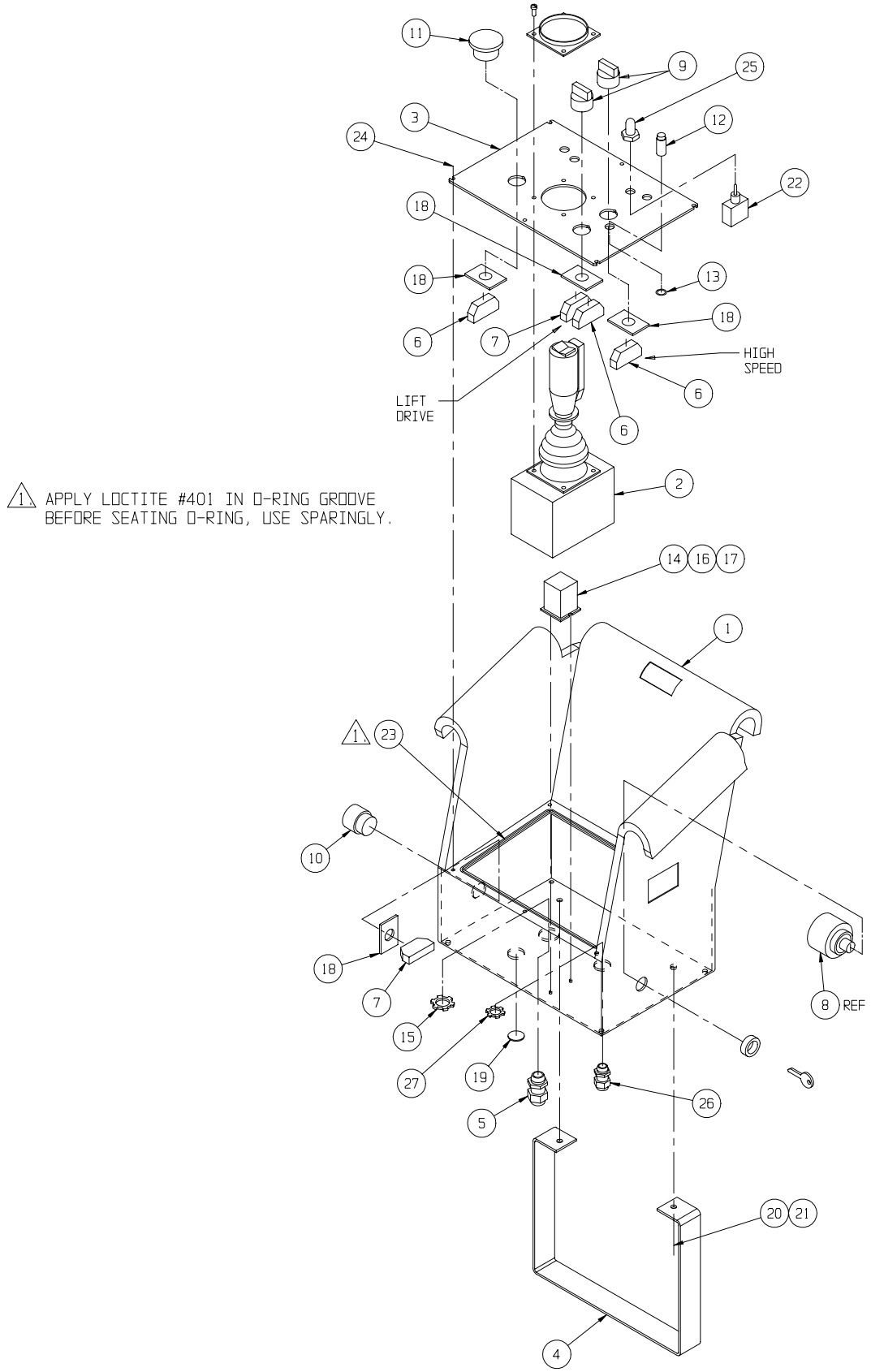
11
9
25
3
12
24
22
18
18
13
18
6
7
HIGH SPEED
6
LIFT DRIVE
6
1. APPLY LOCTITE #401 IN O-RING GROOVE BEFORE SEATING O-RING, USE SPARINGLY.
2
14 16 17
1
1. 23
10
18
7
8 REF
15
27
19
26
5
20 21
4

CONTROL MODULE ASSEMBLY, LX50
TWO-WHEEL DRIVE DUAL FUEL, STANDARD DECK
067521-020

ITEM	PART NO.	DESCRIPTION	QTY.
1	067810-003	CONTROL MODULE WELDMENT	1
2	067491-001	CONTROL BOX , D/F	1
3	067485-000	FUEL TANK, ASSEMBLY, GAS	1
4	063650-012	GAS SPRING	1
5	067484-000	CONTROL BOX MOUNT	1
6	067648-008	END FITTING, GAS SPRING	REF
7	067629-000	LATCH, FLUSH LIFT & TURN	2
8	005299-000	LATCH, TOGGLE	2
9	067902-000	BRACKET, GAS SPRING	1
11	014435-001	TERMINAL, BATTERY	2
12	067489-000	VALVE BLOCK ASSY. (2 W.D.)	1
13	012739-099	HOSE, 1/4 I.D.	11 FT
14	067892-000	BRACKET, VALVE BLOCK	1
15	020541-001	HOSE CLAMP	1
16	011254-008	SCRW HHC GR5 3/8-16UNC X 1	10
17	011708-004	SCRW MACH RD HD 8-32UNC X 1/2	4
18	011248-002	LOCK NUT, ESMA 8-32UNC	4
19	064040-000	ANGLE, BATTERY HOLD DOWN	1
20	062299-002	BATTERY, 12 VDC GROUP-27C	1
21	067856-000	WELDMENT, STIFFENER	1
22	012039-000	ROD, BATTERY HOLD DOWN	2
23	025427-002	HANDLE	1
24	011253-008	SCR HHC 5/16-18 X 1	2
25	067808-000	HINGE, 1 1/2 X 23 7/8	2
26	067809-002	HINGE, 1 1/2 X 65	1
27	067799-008	MODULE COVER / CONTROL	1
28	067800-000	MODULE DOOR, R.H.	1
29	067801-000	MODULE DOOR, L.H.	1
30	026554-002	POP RIVET, 1/4 DIA (.251-.375 GRIP)	36
31	011248-006	NUT, 3/8-16 ESNA	7
32	011252-006	SCREW, HHC 1/4-20 X 3/4	2

ITEM	PART NO.	DESCRIPTION	QTY.
33	011248-004	NUT, 1/4-20 ESNA	4
34	011239-006	WASHER, 3/8”, SPLIT LOCK	2
35	067854-001	ANGLE, FUEL TANK MOUNT	1
36	011240-006	WASHER, 3/8”, STD, FLT	2
37	011254-006	SCREW HHC 3/8-16 X 3/4	2
39	062125-002	CABLE, BATTERY X 69	2
40	011240-004	WASHER 1/4 FLAT	4
41	011254-004	SCRW HHC GR5 3/8-16UNC X 1/2	4
42	011237-006	WASHER 3/8 STAR	1
43	011248-005	NUT, HEX 5/16-18 ESNA	2
44	015936-004	SCR, SHOULDER 3/8 DIA. X 1/2	2
45	011275-006	SCREW HHC 10-32UNF X 3/4”	4
46	011238-002	WASHER SPLIT-LOCK #10	4
47	067492-001	WIRE HARNESS, MAIN CONTROL	1
48	067492-002	WIRE HARNESS, VALVE BLOCK	1
49	029931-003	CONN. FEMALE PUSH, 16-14 AWG, .250 TAB	4
50	029458-099	WIRE 16 AWG, RED	6 IN.
56	067615-049	HOSE ASSY x 100”	1
57	027823-000	TANK MOUNTING BRACKET	1
58	027934-003	FUEL TANK. PROPANE	1
60	SUPPLIED WITH ENGINE	FEMALE ADAPTER (PROPANE TANK)	1
61		FITTING, STIR 2MP-6MJ BRASS	1
62		RELIEF VALVE 400 PSI	1
63		FITTING 2-2-2 STR TEE BRASS	1

See page 6-66 for wiring diagram

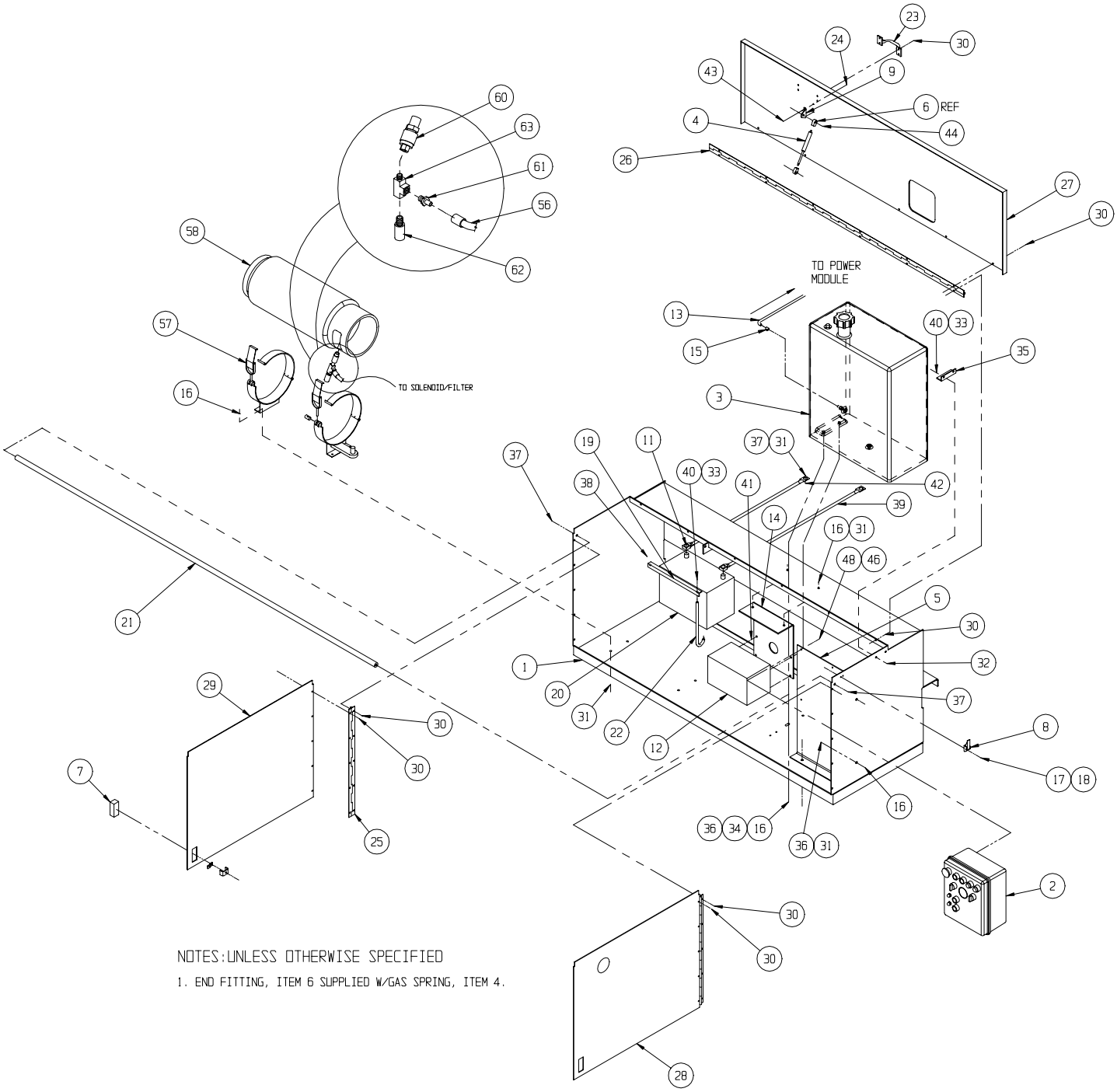
TO POWER MODULE
TO SOLENOID/FILTER
REF
NOTES:UNLESS OTHERWISE SPECIFIED
1. END FITTING, ITEM 6 SUPPLIED W/GAS SPRING, ITEM 4.

CONTROL MODULE ASSEMBLY, LX50
TWO-WHEEL DRIVE DIESEL, STANDARD DECK
067521-021

ITEM	PART NO.	DESCRIPTION	QTY.
1	067810-003	CONTROL MODULE WELDMENT	1
2	067491-002	CONTROL BOX , DIESEL	1
3	067485-001	FUEL TANK ASSEMBLY, DIESEL	1
4	063650-012	GAS SPRING	1
5	067484-000	CONTROL BOX MOUNT	1
6	067648-008	END FITTING, GAS SPRING	REF
7	067629-000	LATCH, FLUSH LIFT & TURN	2
8	005299-000	LATCH, TOGGLE	2
9	067902-000	BRACKET, GAS SPRING	1
11	014435-001	TERMINAL, BATTERY	2
12	067489-000	VALVE BLOCK ASSY. (2 W.D.)	1
13	012739-099	HOSE, 1/4 I.D.	11 FT
14	067892-000	BRACKET, VALVE BLOCK	1
15	020541-001	HOSE CLAMP	2
16	011254-008	SCRW HHC GR5 3/8-16UNC X 1	10
17	011708-004	SCRW MACH RD HD 8-32UNC X 1/2	4
18	011248-002	LOCK NUT, ESMA 8-32UNC	4
19	064040-000	ANGLE, BATTERY HOLD DOWN	1
20	062299-002	BATTERY, 12 VDC GROUP-27C	1
21	067856-000	WELDMENT, STIFFENER	1
22	012039-000	ROD, BATTERY HOLD DOWN	2
23	025427-002	HANDLE	1
24	011253-008	SCR HHC 5/16-18 X 1	2
25	067808-000	HINGE, 1 1/2 X 23 7/8	2
26	067809-002	HINGE, 1 1/2 X 65	1

ITEM	PART NO.	DESCRIPTION	QTY.
27	067799-008	MODULE COVER / CONTROL	1
28	067800-000	MODULE DOOR, R.H.	1
29	067801-000	MODULE DOOR, L.H.	1
30	026554-002	POP RIVET, 1/4 DIA (.251-.375 GRIP)	36
31	011248-006	NUT, 3/8-16 ESNA	7
32	011252-006	SCREW, HHC 1/4-20 X 3/4	2
33	011248-004	NUT, 1/4-20 ESNA	4
34	011239-006	WASHER, 3/8”, SPLIT LOCK	2
35	067854-001	ANGLE, FUEL TANK MOUNT	1
36	011240-006	WASHER, 3/8”, STD, FLT	2
37	011254-006	SCREW HHC 3/8-16 X 3/4	2
38	012736-099	HOSE, 3/16 ID	11 FT
39	062125-002	CABLE, BATTERY X 69	2
40	011240-004	WASHER 1/4 FLAT	4
41	011254-004	SCRW HHC GR5 3/8-16UNC X 1/2	4
42	011237-006	WASHER, 3/8 STAR	1
43	011248-005	NUT, HEX 5/16-18 ESNA	2
44	015936-004	SCR, SHOULDER 3/8 DIA. X 1/2	2
45	011275-006	SCREW HHC 10-32UNF X 3/4”	4
46	011238-002	WASHER SPLIT-LOCK #10	4
47	067492-001	WIRE HARNESS, MAIN CONTROL	1
48	067492-002	WIRE HARNESS, VALVE BLOCK	1
49	029931-003	CONN. FEMALE PUSH, 16-14 AWG, .250 TAB	4
50	029458-099	WIRE 16 AWG, RED	6 IN.

See page 6-67 for wiring diagram

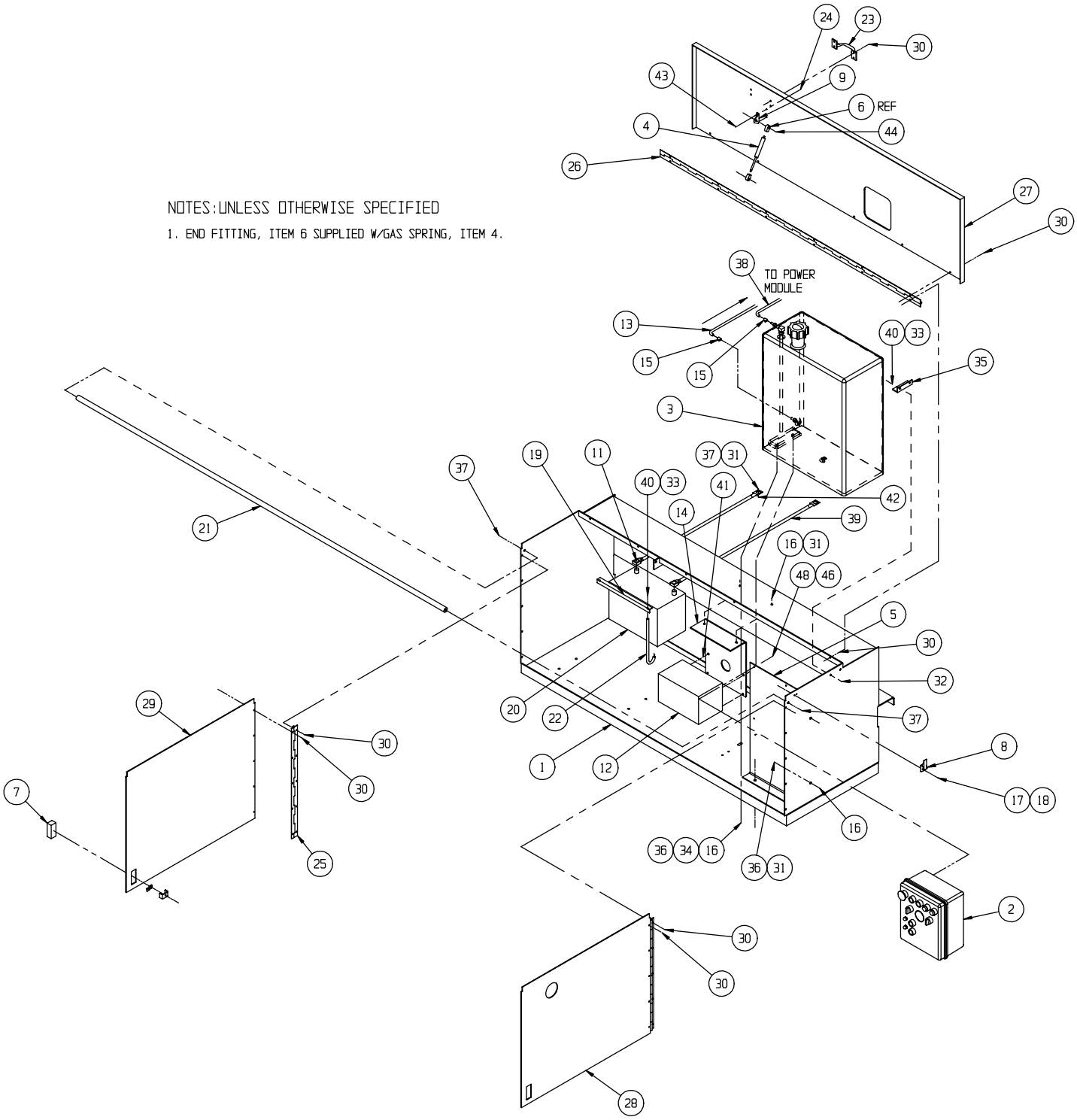
NOTES:UNLESS OTHERWISE SPECIFIED
1. END FITTING, ITEM 6 SUPPLIED W/GAS SPRING, ITEM 4.
TO POWER MODULE
REF

CONTROL MODULE ASSEMBLY, LX50
FOUR-WHEEL DRIVE DUAL FUEL, STANDARD DECK
067521-022

ITEM	PART NO.	DESCRIPTION	QTY.
1	067810-003	CONTROL MODULE WELDMENT	1
2	067491-001	CONTROL BOX , D/F	1
3	067485-000	FUEL TANK, ASSEMBLY, GAS	1
4	063650-012	GAS SPRING	1
5	067484-000	CONTROL BOX MOUNT	1
6	067648-008	END FITTING, GAS SPRING	REF
7	067629-000	LATCH, FLUSH LIFT & TURN	2
8	005299-000	LATCH, TOGGLE	2
9	067902-000	BRACKET, GAS SPRING	1
11	014435-001	TERMINAL, BATTERY	2
12	067489-001	VALVE BLOCK ASSY. (4WD)	1
13	012739-099	HOSE, 1/4 I.D.	11 FT
14	067892-000	BRACKET, VALVE BLOCK	1
15	020541-001	HOSE CLAMP	1
16	011254-008	SCRW HHC GR5 3/8-16UNC X 1	10
17	011708-004	SCRW MACH RD HD 8-32UNC X 1/2	4
18	011248-002	LOCK NUT, ESMA 8-32UNC	4
19	064040-000	ANGLE, BATTERY HOLD DOWN	1
20	062299-002	BATTERY, 12 VDC GROUP-27C	1
21	067856-000	WELDMENT, STIFFENER	1
22	012039-000	ROD, BATTERY HOLD DOWN	2
23	025427-002	HANDLE	1
24	011253-008	SCR HHC 5/16-18 X 1	2
25	067808-000	HINGE, 1 1/2 X 23 7/8	2
26	067809-002	HINGE, 1 1/2 X 65	1
27	067799-008	MODULE COVER / CONTROL	1
28	067800-000	MODULE DOOR, R.H.	1
29	067801-000	MODULE DOOR, L.H.	1

ITEM	PART NO.	DESCRIPTION	QTY.
30	026554-002	POP RIVET, 1/4 DIA (.251-.375 GRIP)	36
31	011248-006	NUT, 3/8-16 ESNA	7
32	011252-006	SCREW, HHC 1/4-20 X 3/4	2
33	011248-004	NUT, 1/4-20 ESNA	4
34	011239-006	WASHER, 3/8”, SPLIT LOCK	2
35	067854-001	ANGLE, FUEL TANK MOUNT	1
36	011240-006	WASHER, 3/8”, STD, FLT	2
37	011254-006	SCREW HHC 3/8-16 X 3/4	2
39	062125-002	CABLE, BATTERY X 69	2
40	011240-004	WASHER 1/4 FLAT	4
41	011254-004	SCRW HHC GR5 3/8-16UNC X 1/2	4
42	011237-006	WASHER, 3/8 STAR	1
43	011248-005	NUT, HEX 5/16-18 ESNA	2
44	015936-004	SCR, SHOULDER 3/8 DIA. X 1/2	2
45	011275-006	SCREW HHC 10-32UNF X 3/4”	4
46	011238-002	WASHER SPLIT-LOCK #10	4
47	067492-001	WIRE HARNESS, MAIN CONTROL	1
48	067492-002	WIRE HARNESS, VALVE BLOCK	1
56	067615-049	HOSE ASSY x 100”	1
57	027823-000	TANK MOUNTING BRACKET	1
58	027934-003	FUEL TANK. PROPANE	1
60	SUPPLIED WITH ENGINE	FEMALE ADAPTER (PROPANE TANK)	1
61		FITTING, STIR 2MP-6MJ BRASS	1
62		RELIEF VALVE 400 PSI	1
63		FITTING 2-2-2 STR TEE BRASS	1

See page 6-66 for wiring diagram

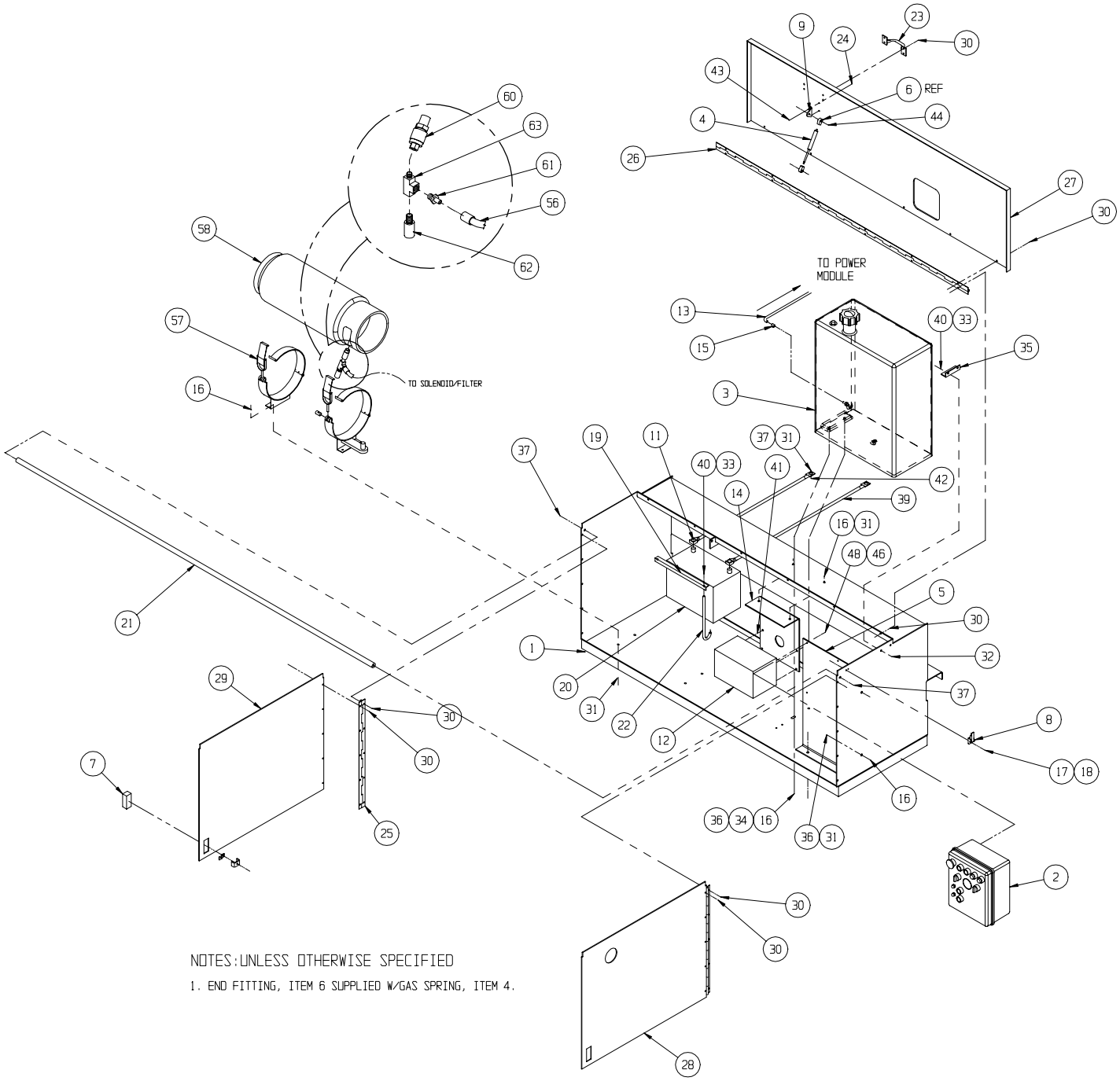
TO POWER MODULE
TO SOLENOID/FILTER
REF
NOTES:UNLESS OTHERWISE SPECIFIED
1. END FITTING, ITEM 6 SUPPLIED W/GAS SPRING, ITEM 4.

CONTROL MODULE ASSEMBLY, LX50
FOUR-WHEEL DRIVE DIESEL, STANDARD DECK

067521-023

ITEM	PART NO.	DESCRIPTION	QTY.
1	067810-003	CONTROL MODULE WELDMENT	1
2	067491-002	CONTROL BOX , DIESEL	1
3	067485-001	FUEL TANK ASSEMBLY, DIESEL	1
4	063650-012	GAS SPRING	1
5	067484-000	CONTROL BOX MOUNT	1
6	067648-008	END FITTING, GAS SPRING	REF
7	067629-000	LATCH, FLUSH LIFT & TURN	2
8	05299-000	LATCH, TOGGLE	2
9	067902-000	BRACKET, GAS SPRING	1
11	014435-001	TERMINAL, BATTERY	2
12	067489-001	VALVE BLOCK ASSY. (4WD)	1
13	012739-099	HOSE, 1/4 I.D.	11 FT
14	067892-000	BRACKET, VALVE BLOCK	1
15	020541-001	HOSE CLAMP	2
16	011254-008	SCRW HHC GR5 3/8-16UNC X 1	10
17	011708-004	SCRW MACH RD HD 8-32UNC X 1/2	4
18	011248-002	LOCK NUT, ESMA 8-32UNC	4
19	064040-000	ANGLE, BATTERY HOLD DOWN	1
20	062299-002	BATTERY, 12 VDC GROUP-27C	1
21	067856-000	WELDMENT, STIFFENER	1
22	012039-000	ROD, BATTERY HOLD DOWN	2
23	025427-002	HANDLE	1
24	011253-008	SCR HHC 5/16-18 X 1	2
25	067808-000	HINGE, 1 1/2 X 23 7/8	2

ITEM	PART NO.	DESCRIPTION	QTY.
26	067809-002	HINGE, 1 1/2 X 65	1
27	067799-008	MODULE COVER / CONTROL	1
28	067800-000	MODULE DOOR, R.H.	1
29	067801-000	MODULE DOOR, L.H.	1
30	026554-002	POP RIVET, 1/4 DIA (.251-.375 GRIP)	36
31	011248-006	NUT, 3/8-16 ESNA	7
32	011252-006	SCREW, HHC 1/4-20 X 3/4	2
33	011248-004	NUT, 1/4-20 ESNA	4
34	011239-006	WASHER, 3/8”, SPLIT LOCK	2
35	067854-001	ANGLE, FUEL TANK MOUNT	1
36	011240-006	WASHER, 3/8”, STD, FLT	2
37	011254-006	SCREW HHC 3/8-16 X 3/4	2
38	012736-099	HOSE, 3/16 ID	11 FT
39	062125-002	CABLE, BATTERY X 69	2
40	011240-004	WASHER 1/4 FLAT	4
41	011254-004	SCRW HHC GR5 3/8-16UNC X 1/2	4
42	011237-006	WASHER, 3/8 STAR	1
43	011248-005	NUT, HEX 5/16-18 ESNA	2
44	015936-004	SCR, SHOULDER 3/8 DIA. X 1/2	2
45	011275-006	SCREW HHC 10-32UNF X 3/4”	4
46	011238-002	WASHER SPLIT-LOCK #10	4
47	067492-001	WIRE HARNESS, MAIN CONTROL	1
48	067492-002	WIRE HARNESS, VALVE BLOCK	1

See page 6-67 for wiring diagram

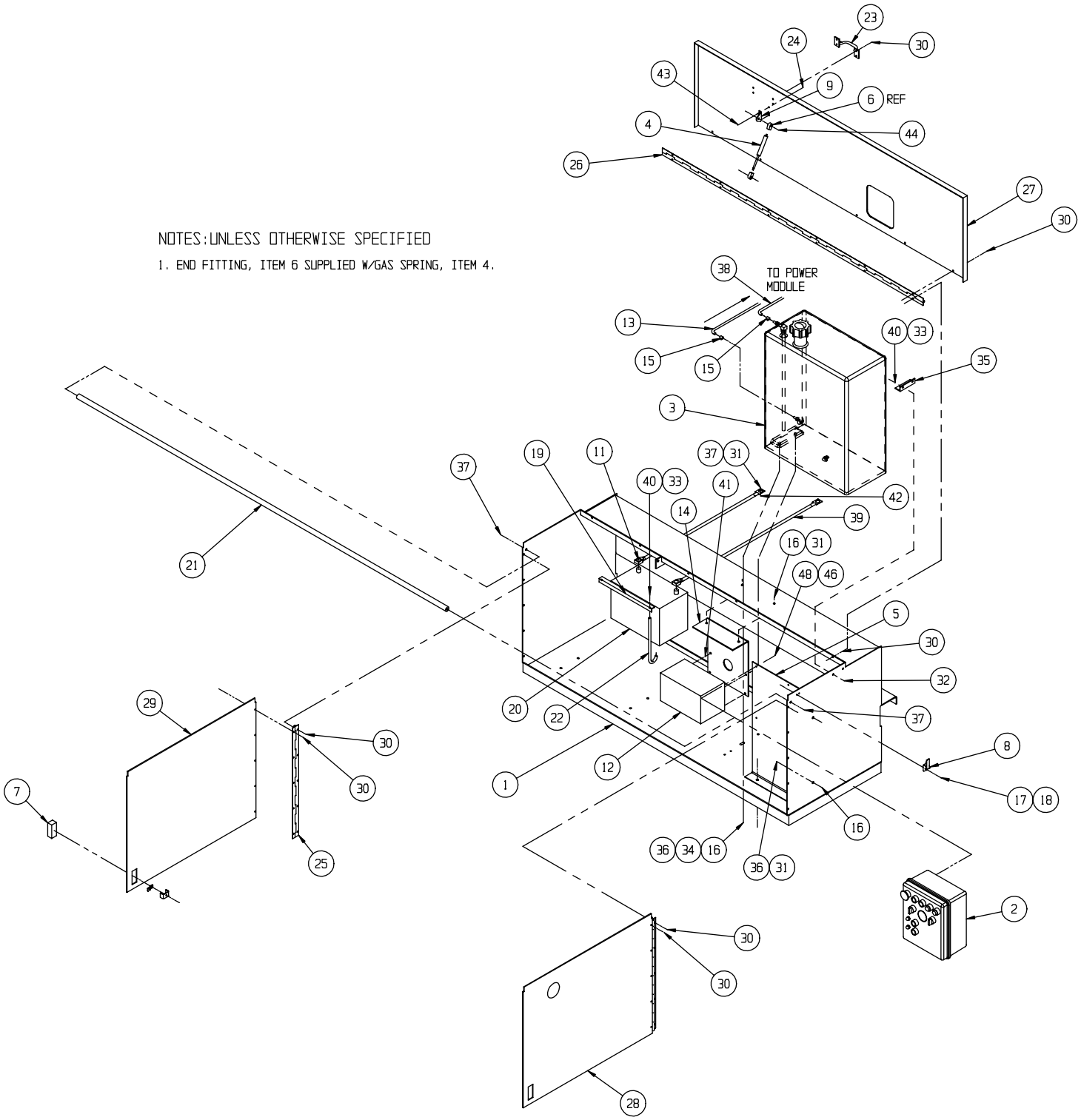
NOTES:UNLESS OTHERWISE SPECIFIED
1. END FITTING, ITEM 6 SUPPLIED W/GAS SPRING, ITEM 4.
TO POWER MODULE
REF

CONTROL MODULE ASSEMBLY, LX50
TWO-WHEEL DRIVE DUAL FUEL, DUAL DECK
067521-028

ITEM	PART NO.	DESCRIPTION	QTY.
1	067810-003	CONTROL MODULE WELDMENT	1
2	067491-003	CONTROL BOX , D/F, W/OUTRIGGER	1
3	067485-000	FUEL TANK, ASSEMBLY, GAS	1
4	063650-012	GAS SPRING	1
5	067484-000	CONTROL BOX MOUNT	1
6	067648-008	END FITTING, GAS SPRING	REF
7	067629-000	LATCH, FLUSH LIFT & TURN	2
8	05299-000	LATCH, TOGGLE	2
9	067902-000	BRACKET, GAS SPRING	1
11	014435-001	TERMINAL, BATTERY	2
12	067489-000	VALVE BLOCK ASSY. (2 W.D.)	1
13	012739-099	HOSE, 1/4 I.D.	11 FT
14	067892-000	BRACKET, VALVE BLOCK	1
15	020541-001	HOSE CLAMP	1
16	011254-008	SCRW HHC GR5 3/8-16UNC X 1	14
17	011708-004	SCRW MACH RD HD 8-32UNC X 1/2	4
18	011248-002	LOCK NUT, ESMA 8-32UNC	4
19	064040-000	ANGLE, BATTERY HOLD DOWN	1
20	062299-002	BATTERY, 12 VDC GROUP-27C	1
21	067856-000	WELDMENT, STIFFENER	1
22	012039-000	ROD, BATTERY HOLD DOWN	2
23	025427-002	HANDLE	1
24	011253-008	SCR HHC 5/16-18 X 1	2
25	067808-000	HINGE, 1 1/2 X 23 7/8	2
26	067809-002	HINGE, 1 1/2 X 65	1
27	067799-008	MODULE COVER / CONTROL	1
28	030841-031	MODULE DOOR, R.H.	1
29	030841-032	MODULE DOOR, L.H.	1
30	026554-002	POP RIVET, 1/4 DIA (.251-.375 GRIP)	36
31	011248-006	NUT, 3/8-16 ESNA	11

ITEM	PART NO.	DESCRIPTION	QTY.
32	011252-006	SCREW, HHC 1/4-20 X 3/4	2
33	011248-004	NUT, 1/4-20 ESNA	6
34	011239-006	WASHER, 3/8", SPLIT LOCK	2
35	067854-001	ANGLE, FUEL TANK MOUNT	1
36	011240-006	WASHER, 3/8", STD, FLT	2
37	011254-006	SCREW HHC 3/8-16 X 3/4	2
39	062125-002	CABLE, BATTERY X 69	2
40	011240-004	WASHER 1/4 FLAT-16UNC X 1/2	4
41	011254-004	SCRW HHC GR5 3/8-16UNC X 1/2	4
42	011237-006	WASHER, 3/8 STAR	1
43	011248-005	NUT, HEX 5/16-18 ESNA	2
44	015936-004	SCR, SHOULDER 3/8 DIA. X 1/2	2
45	030841-030	WELDMENT, STAIR	1
46	067490-000	VALVE BLOCK, OUTRIGGER CONTROL	1
47	011252-032	SCREW HHC 1/4-20UNC X 4"	2
48	011275-006	SCREW HHC 10-32UNF X 3/4"	4
49	011238-002	WASHER SPLIT-LOCK #10	4
50	067492-001	WIRE HARNESS, MAIN CONTROL	1
51	067492-002	WIRE HARNESS, VALVE BLOCK	1
52	029931-003	CONN. FEMALE PUSH, 16-14 AWG, .250 TAB	2
53	029458-099	WIRE 16 AWG, RED	3 IN.
54	020733-005	TEE 12FJ-12MJ-12MJ	2
55	014693-003	ADAPTER, 12FJ-6MJ	2
56	067615-049	HOSE ASSY X 100"	1
57	027823-000	TANK MOUNTING BRACKET	1
58	027934-009	FUEL TANK, PROPANE	1
60	Supplied with engine	FEMALE ADAPTER (PROPANE TANK)	1
61		FITTING,STR 2MP-6MJ BRASS	1
62		RELIEF VALVE 400 PSI	1
63		FITTING 2-2-2 STR TEE BRASS	1

See page 6-68 for wiring diagram

NOTES: UNLESS OTHERWISE SPECIFIED

1. END FITTING, ITEM 6 SUPPLIED W/GAS SPRING, ITEM 4.

2. ITEMS 54 AND 55 SCREW ONTO ADAPTERS IN PORTS 1 AND 16 OF VALVE BLOCK.

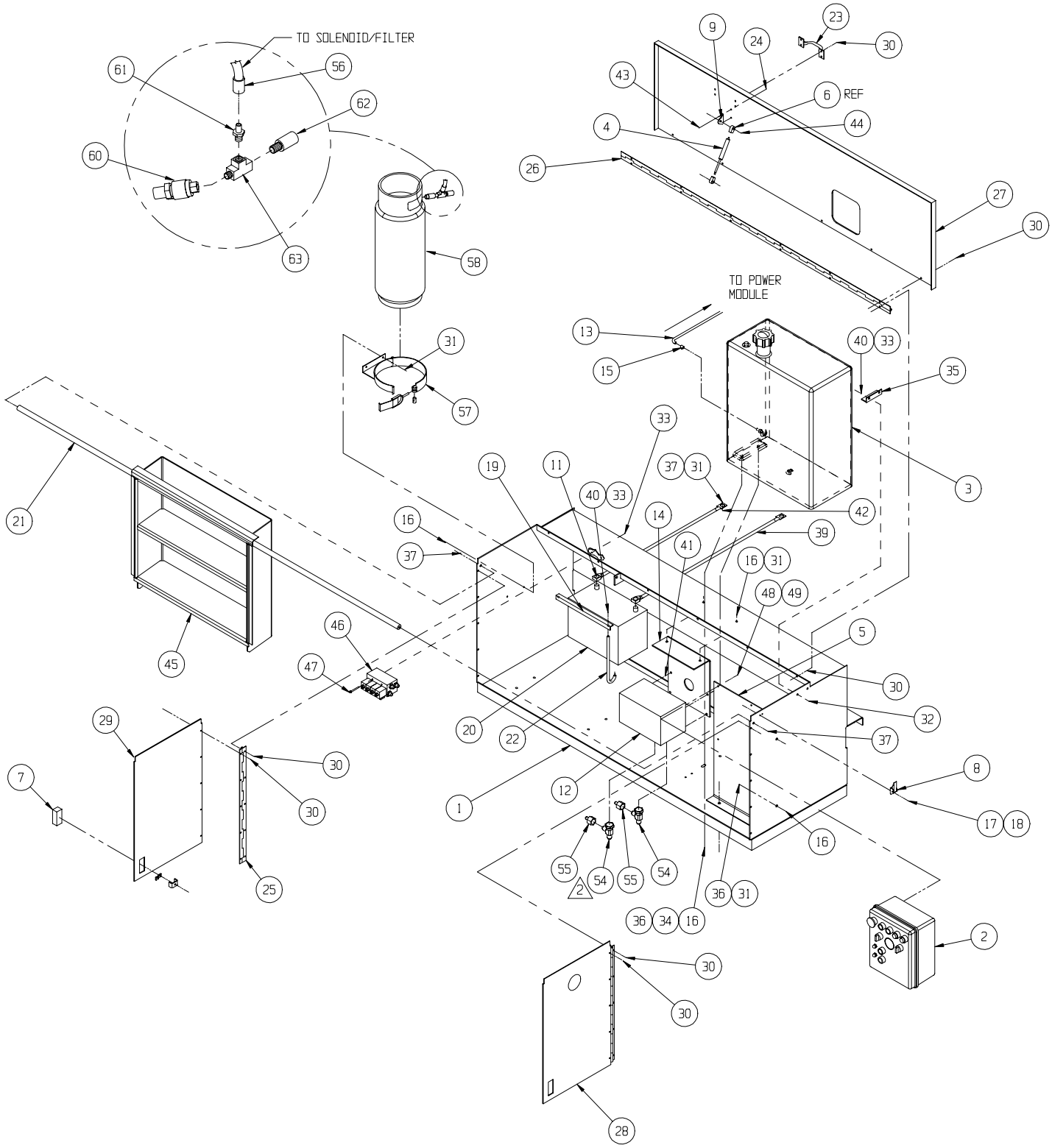

CONTROL MODULE ASSEMBLY, LX50
TWO-WHEEL DRIVE DIESEL, DUAL DECK
067521-029

ITEM	PART NO.	DESCRIPTION	QTY.
1	067810-003	CONTROL MODULE WELDMENT	1
2	067491-004	CONTROL BOX , DIESEL, W/OUTRIGGER	1
3	067485-001	FUEL TANK, ASSEMBLY, DIESEL	1
4	063650-012	GAS SPRING	1
5	067484-000	CONTROL BOX MOUNT	1
6	067648-008	END FITTING, GAS SPRING	REF
7	067629-000	LATCH, FLUSH LIFT & TURN	2
8	05299-000	LATCH, TOGGLE	2
9	067902-000	BRACKET, GAS SPRING	1
11	014435-001	TERMINAL, BATTERY	2
12	067489-000	VALVE BLOCK ASSY. (2 W.D.)	1
13	012739-099	HOSE, 1/4 I.D.	11 FT
14	067892-000	BRACKET, VALVE BLOCK	1
15	020541-001	HOSE CLAMP	2
16	011254-008	SCRW HHC GR5 3/8-16UNC X 1	10
17	011708-004	SCRW MACH RD HD 8-32UNC X 1/2	4
18	011248-002	LOCK NUT, ESMA 8-32UNC	4
19	064040-000	ANGLE, BATTERY HOLD DOWN	1
20	062299-002	BATTERY, 12 VDC GROUP-27C	1
21	067856-000	WELDMENT, STIFFENER	1
22	012039-000	ROD, BATTERY HOLD DOWN	2
23	025427-002	HANDLE	1
24	011253-008	SCR HHC 5/16-18 X 1	2
25	067808-000	HINGE, 1 1/2 X 23 7/8	2
26	067809-002	HINGE, 1 1/2 X 65	1
27	067799-008	MODULE COVER / CONTROL	1
28	030841-031	MODULE DOOR, R.H.	1

ITEM	PART NO.	DESCRIPTION	QTY.
29	030841-032	MODULE DOOR, L.H.	1
30	026554-002	POP RIVET, 1/4 DIA (.251-.375 GRIP)	36
31	011248-006	NUT, 3/8-16 ESNA	7
32	011252-006	SCREW, HHC 1/4-20 X 3/4	2
33	011248-004	NUT, 1/4-20 ESNA	6
34	011239-006	WASHER, 3/8", SPLIT LOCK	2
35	067854-001	ANGLE, FUEL TANK MOUNT	1
36	011240-006	WASHER, 3/8", STD, FLT	2
37	011254-006	SCREW HHC 3/8-16 X 3/4	2
38	012736-099	HOSE, 3/16 ID	11 FT
39	062125-002	CABLE, BATTERY X 69	2
40	011240-004	WASHER 1/4 FLAT	4
41	011254-004	SCRW HHC GR5 3/8-16UNC X 1/2	4
42	011237-006	WASHER, 3/8 STAR	1
43	011248-005	NUT, HEX 5/16-18 ESNA	2
44	015936-004	SCR, SHOULDER 3/8 DIA. X 1/2	2
45	030841-030	WELDMENT, STAIR	1
46	067490-000	VALVE BLOCK, OUTRIGGER CONTROL	1
47	011252-032	SCREW HHC 1/4-20UNC X 4"	2
48	011275-006	SCREW HHC 10-32UNF X 3/4"	4
49	011238-002	WASHER SPLIT-LOCK #10	4
50	067492-001	WIRE HARNESS, MAIN CONTROL	1
51	067492-002	WIRE HARNESS, VALVE BLOCK	1
52	029931-003	CONN. FEMALE PUSH, 16-14 AWG, .250 TAB	2
53	029458-099	WIRE 16 AWG, RED	3 IN.
54	020733-005	TEE 12FJ-12MJ-12MJ	2
55	014693-003	ADAPTER, 12FJ-6MJ	2

See page 6-68 for wiring diagram

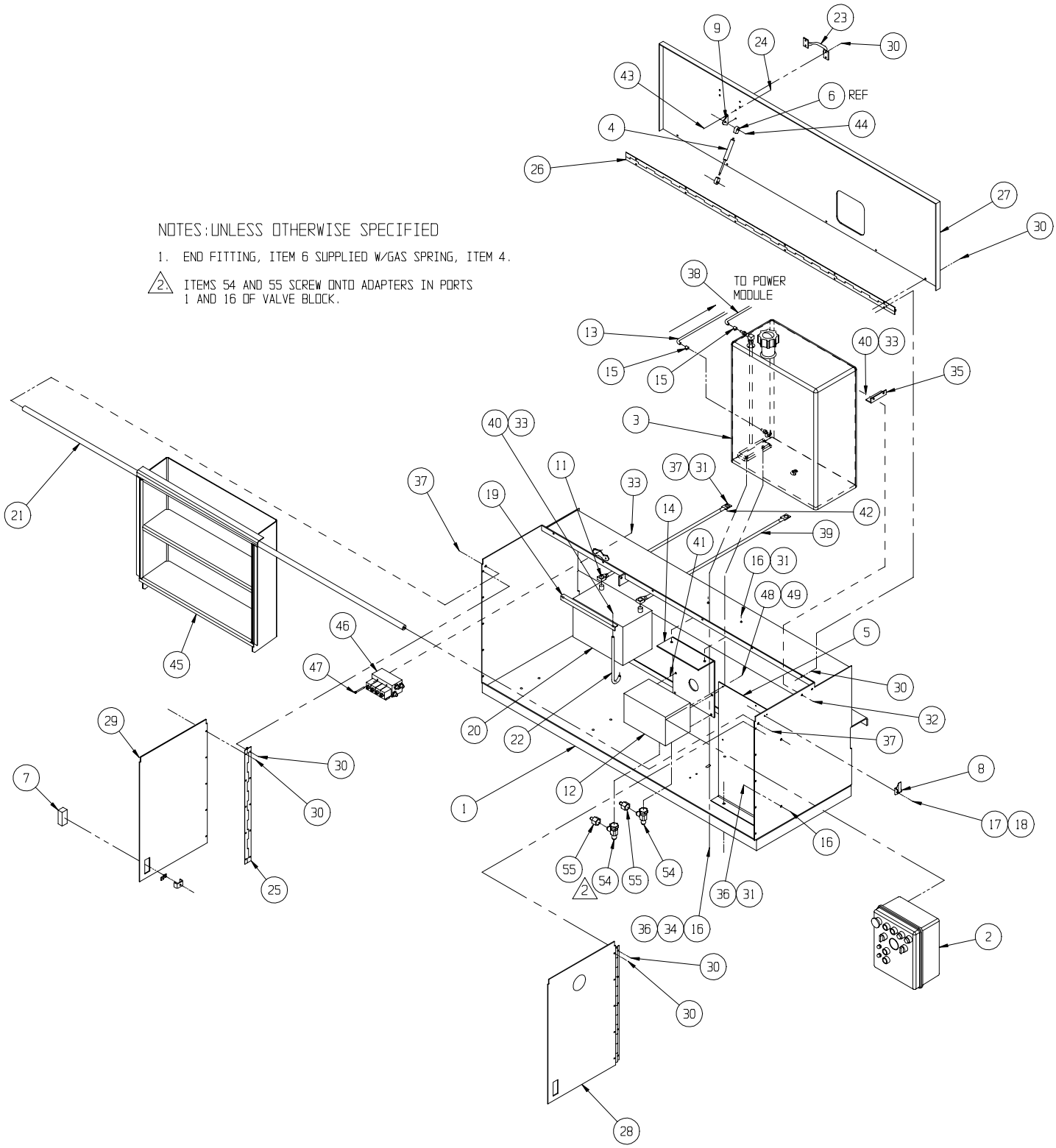
NOTES: UNLESS OTHERWISE SPECIFIED
1. END FITTING, ITEM 6 SUPPLIED W/GAS SPRING, ITEM 4.
2 ITEMS 54 AND 55 SCREW ONTO ADAPTERS IN PORTS 1 AND 16 OF VALVE BLOCK.
TO POWER MODULE
REF

CONTROL MODULE ASSEMBLY, LX50
FOUR-WHEEL DRIVE DUAL FUEL, DUAL DECK
067521-030

ITEM	PART NO.	DESCRIPTION	QTY.
1	067810-003	CONTROL MODULE WELDMENT	1
2	067491-003	CONTROL BOX , D/F, W/OUTRIGGER	1
3	067485-000	FUEL TANK, ASSEMBLY, GAS	1
4	063650-012	GAS SPRING	1
5	067484-000	CONTROL BOX MOUNT	1
6	067648-008	END FITTING, GAS SPRING	REF
7	067629-000	LATCH, FLUSH LIFT & TURN	2
8	05299-000	LATCH, TOGGLE	2
9	067902-000	BRACKET, GAS SPRING	1
11	014435-001	TERMINAL, BATTERY	2
12	067489-001	VALVE BLOCK ASSY. (4 W.D.)	1
13	012739-099	HOSE, 1/4 I.D.	11 FT
14	067892-000	BRACKET, VALVE BLOCK	1
15	020541-001	HOSE CLAMP	1
16	011254-008	SCRW HHC GR5 3/8-16UNC X 1	14
17	011708-004	SCRW MACH RD HD 8-32UNC X 1/2	4
18	011248-002	LOCK NUT, ESMA 8-32UNC	4
19	064040-000	ANGLE, BATTERY HOLD DOWN	1
20	062299-002	BATTERY, 12 VDC GROUP-27C	1
21	067856-000	WELDMENT, STIFFENER	1
22	012039-000	ROD, BATTERY HOLD DOWN	2
23	025427-002	HANDLE	1
24	011253-008	SCR HHC 5/16-18 X 1	2
25	067808-000	HINGE, 1 1/2 X 23 7/8	2
26	067809-002	HINGE, 1 1/2 X 65	1
27	067799-008	MODULE COVER / CONTROL	1
28	030841-031	MODULE DOOR, R.H.	1
29	030841-032	MODULE DOOR, L.H.	1
30	026554-002	POP RIVET, 1/4 DIA (.251-.375 GRIP)	36

ITEM	PART NO.	DESCRIPTION	QTY.
31	011248-006	NUT, 3/8-16 ESNA	11
32	011252-006	SCREW, HHC 1/4-20 X 3/4	2
33	011248-004	NUT, 1/4-20 ESNA	6
34	011239-006	WASHER, 3/8”, SPLIT LOCK	2
35	067854-001	ANGLE, FUEL TANK MOUNT	1
36	011240-006	WASHER, 3/8”, STD, FLT	2
37	011254-006	SCREW HHC 3/8-16 X 3/4	2
39	062125-002	CABLE, BATTERY X 69	2
40	011240-004	WASHER 1/4 FLAT	4
41	011254-004	SCRW HHC GR5 3/8-16UNC X 1/2	4
42	011237-006	WASHER, 3/8 STAR	1
43	011248-005	NUT, HEX 5/16-18 ESNA	2
44	015936-004	SCR, SHOULDER 3/8 DIA. X 1/2	2
45	030841-030	WELDMENT, STAIR	1
46	067490-000	VALVE BLOCK, OUTRIGGER CONTROL	1
47	011252-032	SCREW HHC 1/4-20UNC X 4”	2
48	011275-006	SCREW HHC 10-32UNF X 3/4”	4
49	011238-002	WASHER SPLIT-LOCK #10	4
50	067492-001	WIRE HARNESS, MAIN CONTROL	1
51	067492-002	WIRE HARNESS, VALVE BLOCK	1
52	020733-005	TEE 12FJ-12MJ-12MJ	2
53	014693-003	ADAPTER, 12FJ-6MJ	2
56	067615-049	HOSE ASSY X 100”	1
57	027823-000	TANK MOUNTING BRACKET	1
58	027934-009	FUEL TANK, PROPANE	1
60	Supplied with engine	FEMALE ADAPTER (PROPANE TANK)	1
61		FITTING,STR 2MP-6MJ BRASS	1
62		RELIEF VALVE 400 PSI	1
63		FITTING 2-2-2 STR TEE BRASS	1

See page 6-69 for wiring diagram

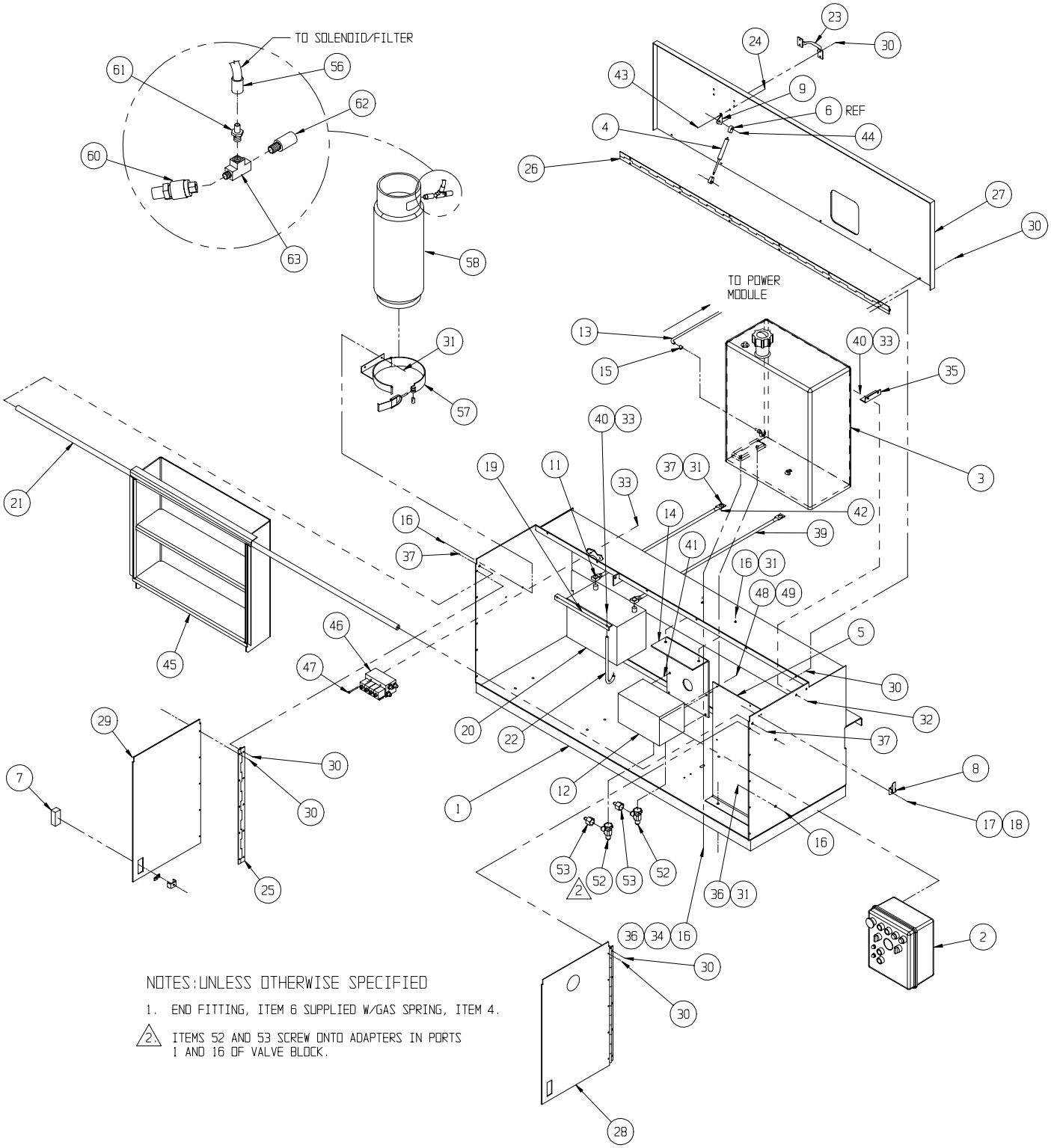
TO SOLENOID/FILTER
TO POWER MODULE
REF
NOTES:UNLESS OTHERWISE SPECIFIED
1. END FITTING, ITEM 6 SUPPLIED W/GAS SPRING, ITEM 4.
2 ITEMS 52 AND 53 SCREW ONTO ADAPTERS IN PORTS 1 AND 16 OF VALVE BLOCK.

CONTROL MODULE ASSEMBLY, LX50
FOUR-WHEEL DRIVE DIESEL, DUAL DECK
067521-031

ITEM	PART NO.	DESCRIPTION	QTY.
1	067810-003	CONTROL MODULE WELDMENT	1
2	067491-004	CONTROL BOX , DIESEL, W/OUTRIGGER	1
3	067485-001	FUEL TANK, ASSEMBLY, DIESEL	1
4	063650-012	GAS SPRING	1
5	067484-000	CONTROL BOX MOUNT	1
6	067648-008	END FITTING, GAS SPRING	REF
7	067629-000	LATCH, FLUSH LIFT & TURN	2
8	05299-000	LATCH, TOGGLE	2
9	067902-000	BRACKET, GAS SPRING	1
11	014435-001	TERMINAL, BATTERY	2
12	067489-001	VALVE BLOCK ASSY. (4 W.D.)	1
13	012739-099	HOSE, 1/4 I.D.	11 FT
14	067892-000	BRACKET, VALVE BLOCK	1
15	020541-001	HOSE CLAMP	2
16	011254-008	SCRW HHC GR5 3/8-16UNC X 1	10
17	011708-004	SCRW MACH RD HD 8-32UNC X 1/2	4
18	011248-002	LOCK NUT, ESMA 8-32UNC	4
19	064040-000	ANGLE, BATTERY HOLD DOWN	1
20	062299-002	BATTERY, 12 VDC GROUP-27C	1
21	067856-000	WELDMENT, STIFFENER	1
22	012039-000	ROD, BATTERY HOLD DOWN	2
23	025427-002	HANDLE	1
24	011253-008	SCR HHC 5/16-18 X 1	2
25	067808-000	HINGE, 1 1/2 X 23 7/8	2
26	067809-002	HINGE, 1 1/2 X 65	1
27	067799-008	MODULE COVER / CONTROL	1

ITEM	PART NO.	DESCRIPTION	QTY.
28	030841-031	MODULE DOOR, R.H.	1
29	030841-032	MODULE DOOR, L.H.	1
30	026554-002	POP RIVET, 1/4 DIA (.251-.375 GRIP)	36
31	011248-006	NUT, 3/8-16 ESNA	7
32	011252-006	SCREW, HHC 1/4-20 X 3/4	2
33	011248-004	NUT, 1/4-20 ESNA	6
34	011239-006	WASHER, 3/8”, SPLIT LOCK	2
35	067854-001	ANGLE, FUEL TANK MOUNT	1
36	011240-006	WASHER, 3/8”, STD, FLT	2
37	011254-006	SCREW HHC 3/8-16 X 3/4	2
38	012736-099	HOSE, 3/16 ID	11 FT
39	062125-002	CABLE, BATTERY X 69	2
40	011240-004	WASHER 1/4 FLAT	4
41	011254-004	SCRW HHC GR5 3/8-16UNC X 1/2	4
42	011237-006	WASHER, 3/8 STAR	1
43	011248-005	NUT, HEX 5/16-18 ESNA	2
44	015936-004	SCR, SHOULDER 3/8 DIA. X 1/2	2
45	030841-030	WELDMENT, STAIR	1
46	067490-000	VALVE BLOCK, OUTRIGGER CONTROL	1
47	011252-032	SCREW HHC 1/4-20UNC X 4”	2
48	011275-006	SCREW HHC 10-32UNF X 3/4”	4
49	011238-002	WASHER SPLIT-LOCK #10	4
50	067492-001	WIRE HARNESS, MAIN CONTROL	1
51	067492-002	WIRE HARNESS, VALVE BLOCK	1
52	020733-005	TEE 12FJ-12MJ-12MJ	2
53	014693-003	ADAPTER, 12FJ-6MJ	2

See page 6-69 for wiring diagram

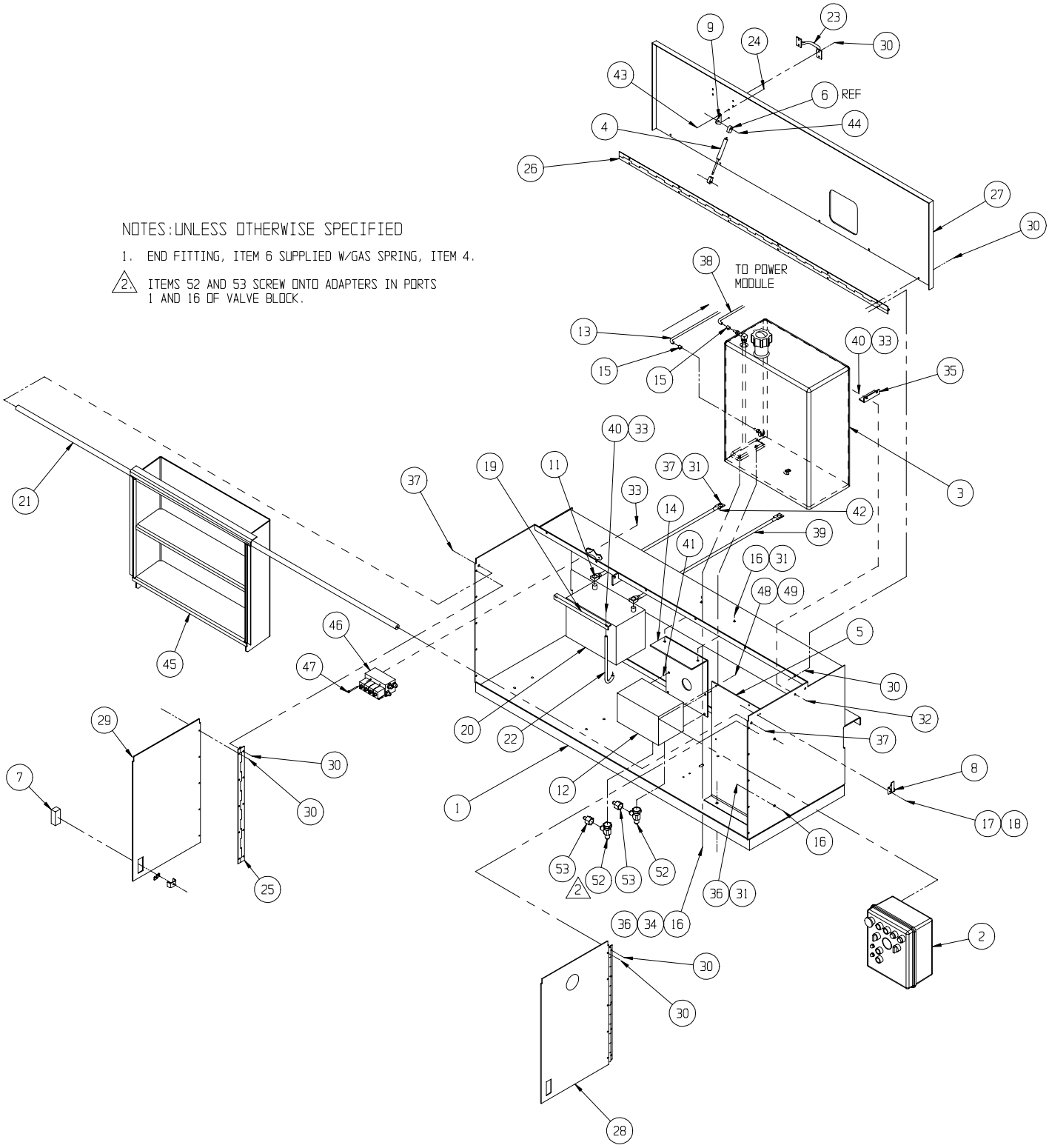
NOTES:UNLESS OTHERWISE SPECIFIED
1. END FITTING, ITEM 6 SUPPLIED W/GAS SPRING, ITEM 4.
2. ITEMS 52 AND 53 SCREW ONTO ADAPTERS IN PORTS 1 AND 16 OF VALVE BLOCK.
TO POWER MODULE
REF

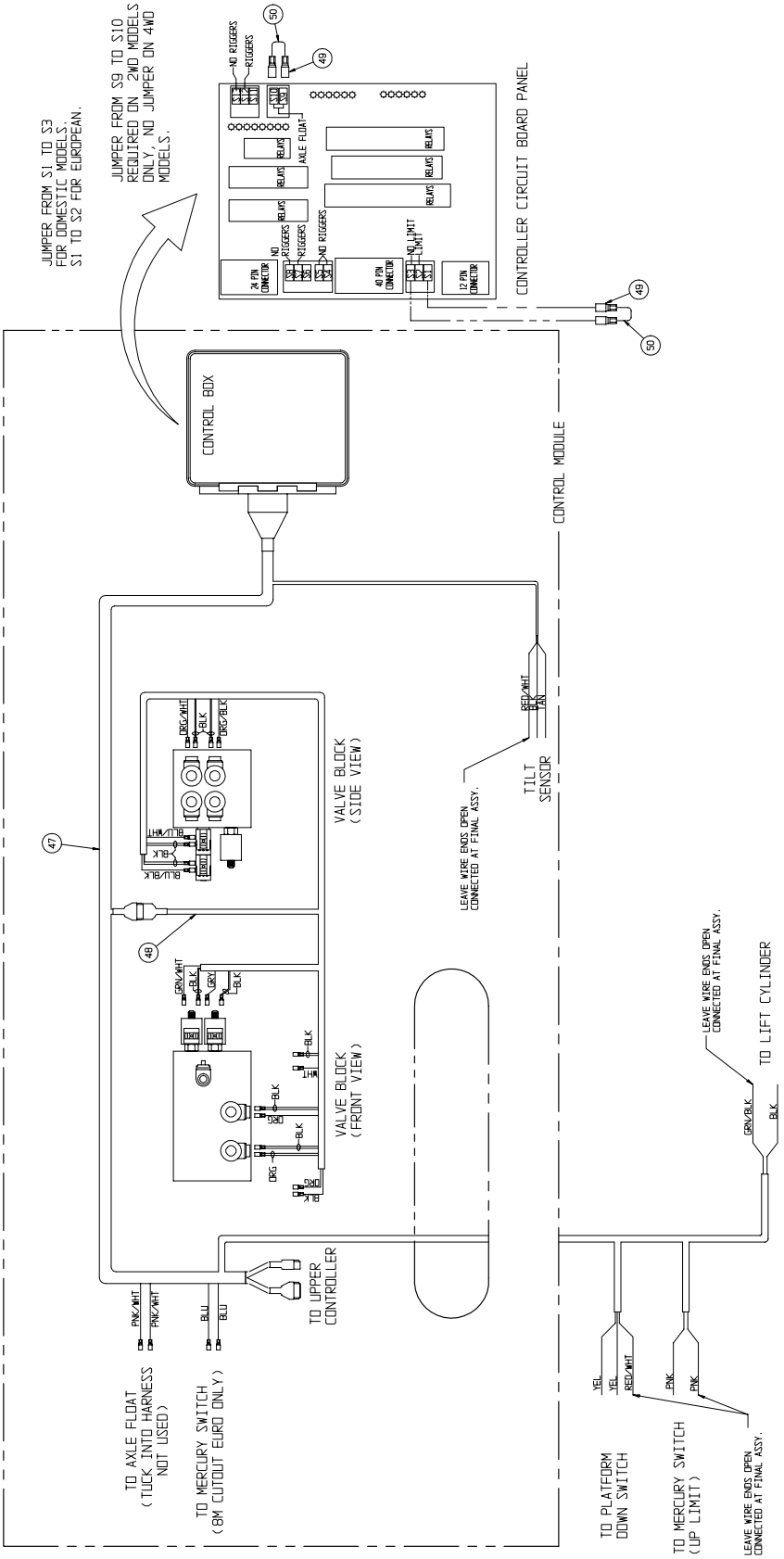

WIRING DIAGRAM - TWO WHEEL DRIVE, STANDARD DECK

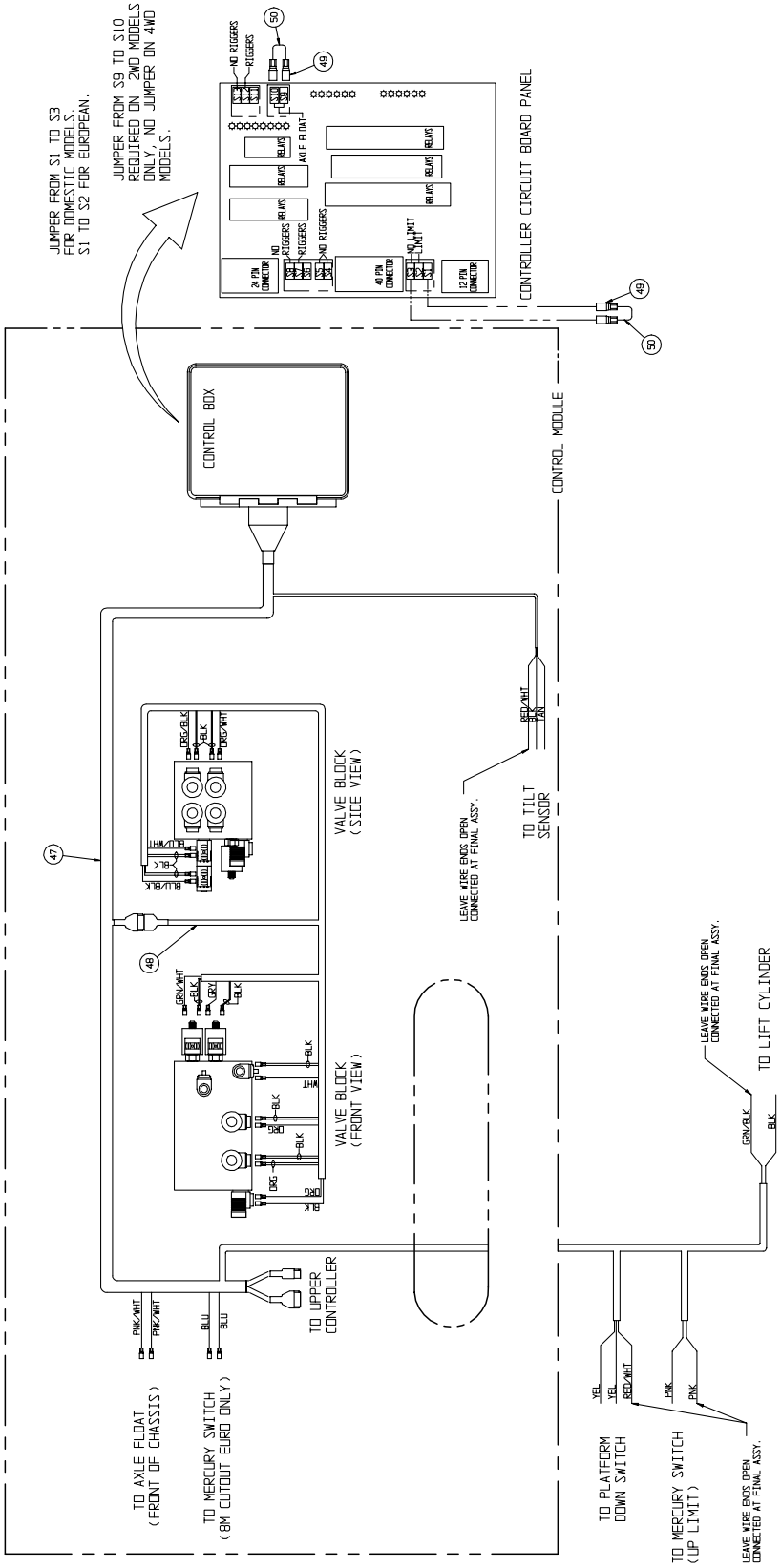

WIRING DIAGRAM - FOUR WHEEL DRIVE, STANDARD DECK

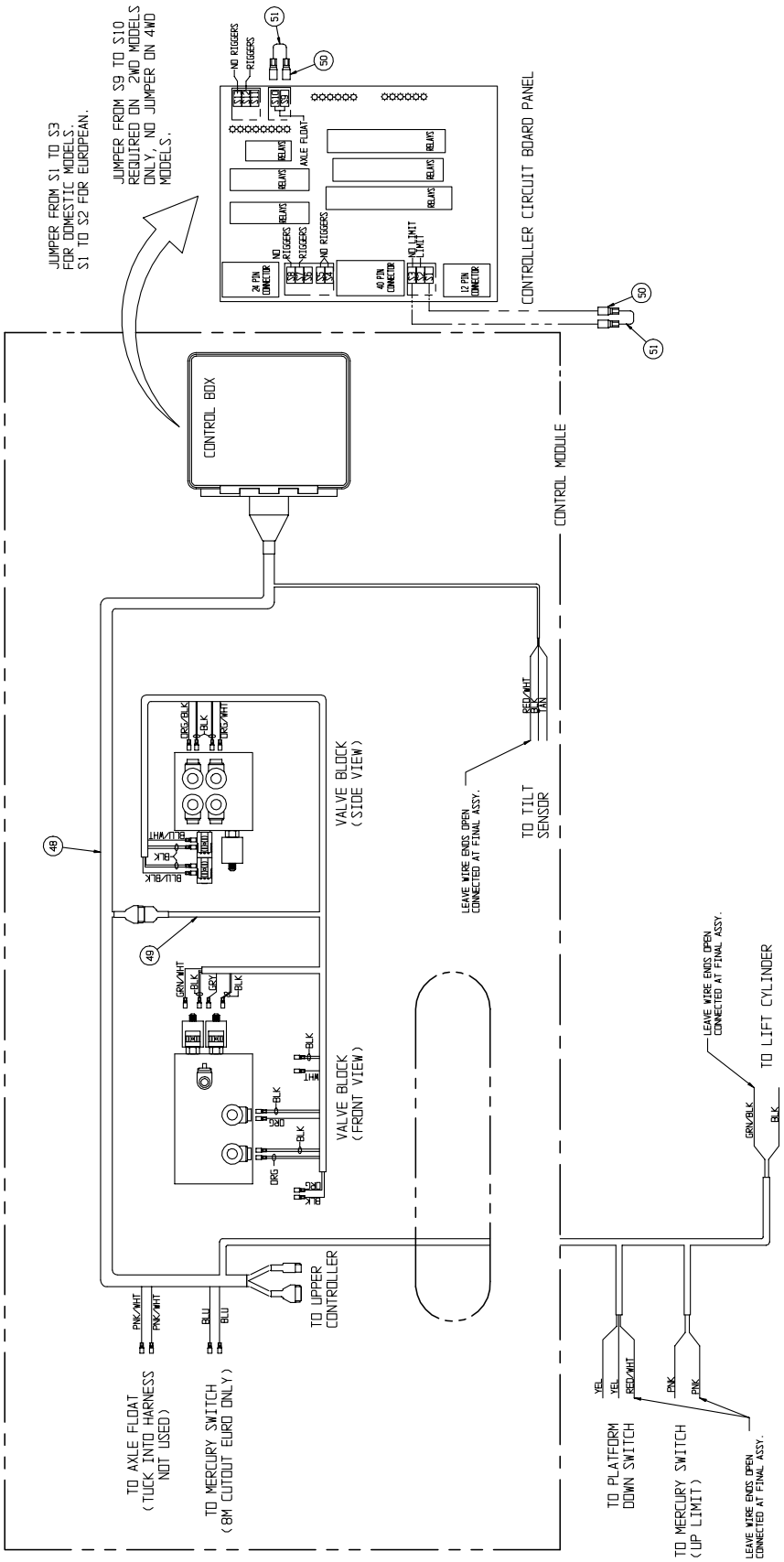

WIRING DIAGRAM - TWO WHEEL DRIVE, DUAL DECK

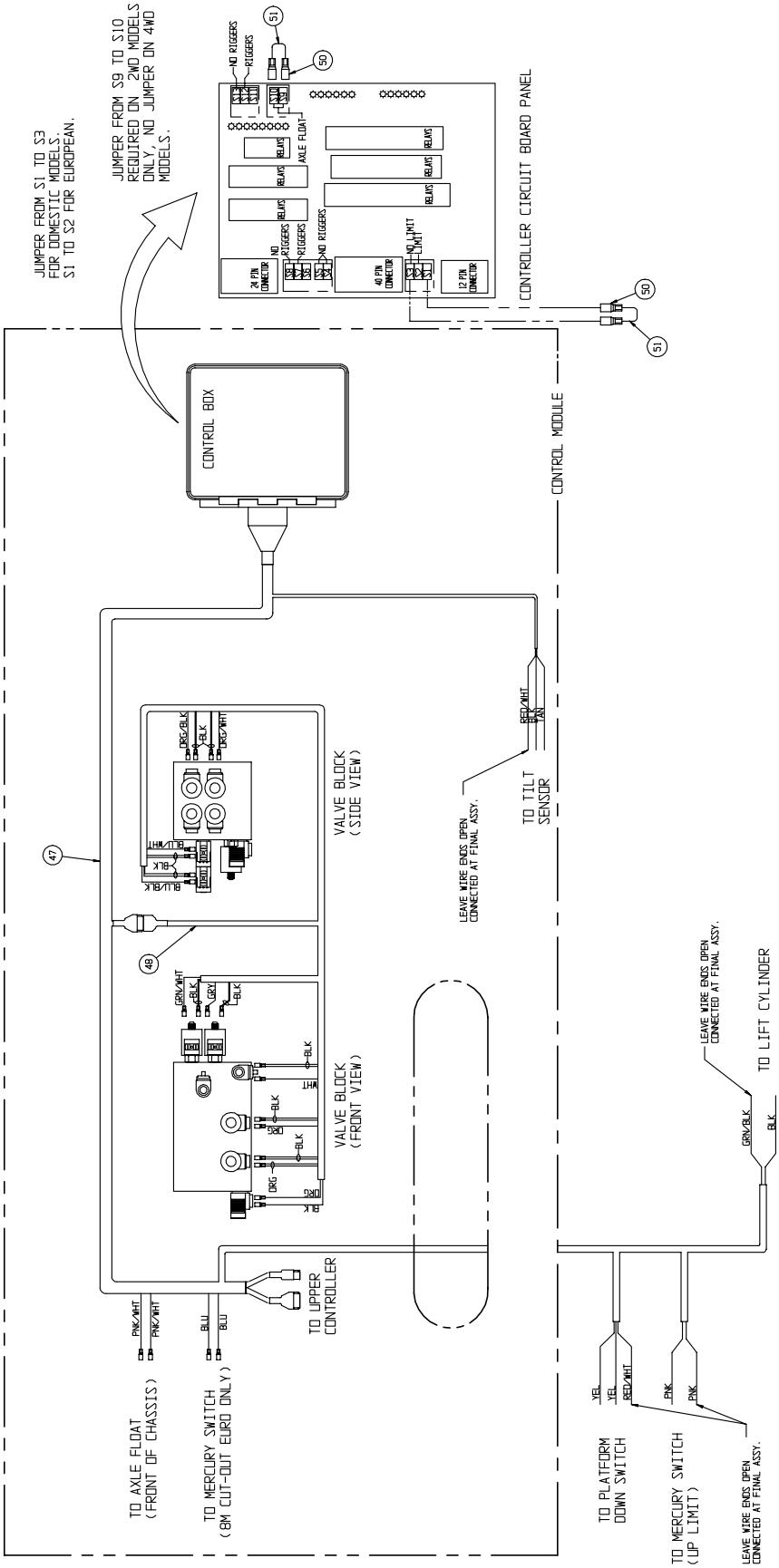

WIRING DIAGRAM - FOUR WHEEL DRIVE, DUAL DECK

CONTROL CABLE ASSEMBLY, LX50

067536-012

ITEM	PART NO.	DESCRIPTION	QTY.
1	067645-099	CABLE, 16/6, 18/12 MULTICONDUCTOR	90 FT
2	029601-013	CONN RING TERM 16-14 GA #10	2
3	063956-002	PIN, CONTACT MALE 20-14 GA	8
4	029610-002	CONN FORK TERM 16-14 GA #8	6
5	029457-099	WIRE, 16GA GRN X 12 IN	1 FT
6	029620-002	CONN, BUTT 16-14GA	4
7	029616-001	CONN, FEMALE PUSH 16-14GA X .188	2
8	029483-099	WIRE 16 GA RD/WHT X 14 IN	1.2 FT
9	068760-001	DT CONNECTOR, RECEPTACLE, # DT04-12P	1
10	067990-001	DT CONNECTOR, RECEPTACLE, # DT04 6P	1
11	068761-000	LOCKING WEDGE, RECECTACLE, # W12P	1
12	067990-003	LOCKING WEDGE, RECECTACLE, # W6P	1
13	015790-004	CONTACT PIN, 16-18 AWG	18
14	068908-001	BOOT ELECT. RECEPTACLE, # DT-12-P-BT	1
15	068908-002	BOOT ELECT. RECEPTACLE, # DT-6-P-BT	1
16	029825-002	DIODE, 5 AMP, 400 V.	1

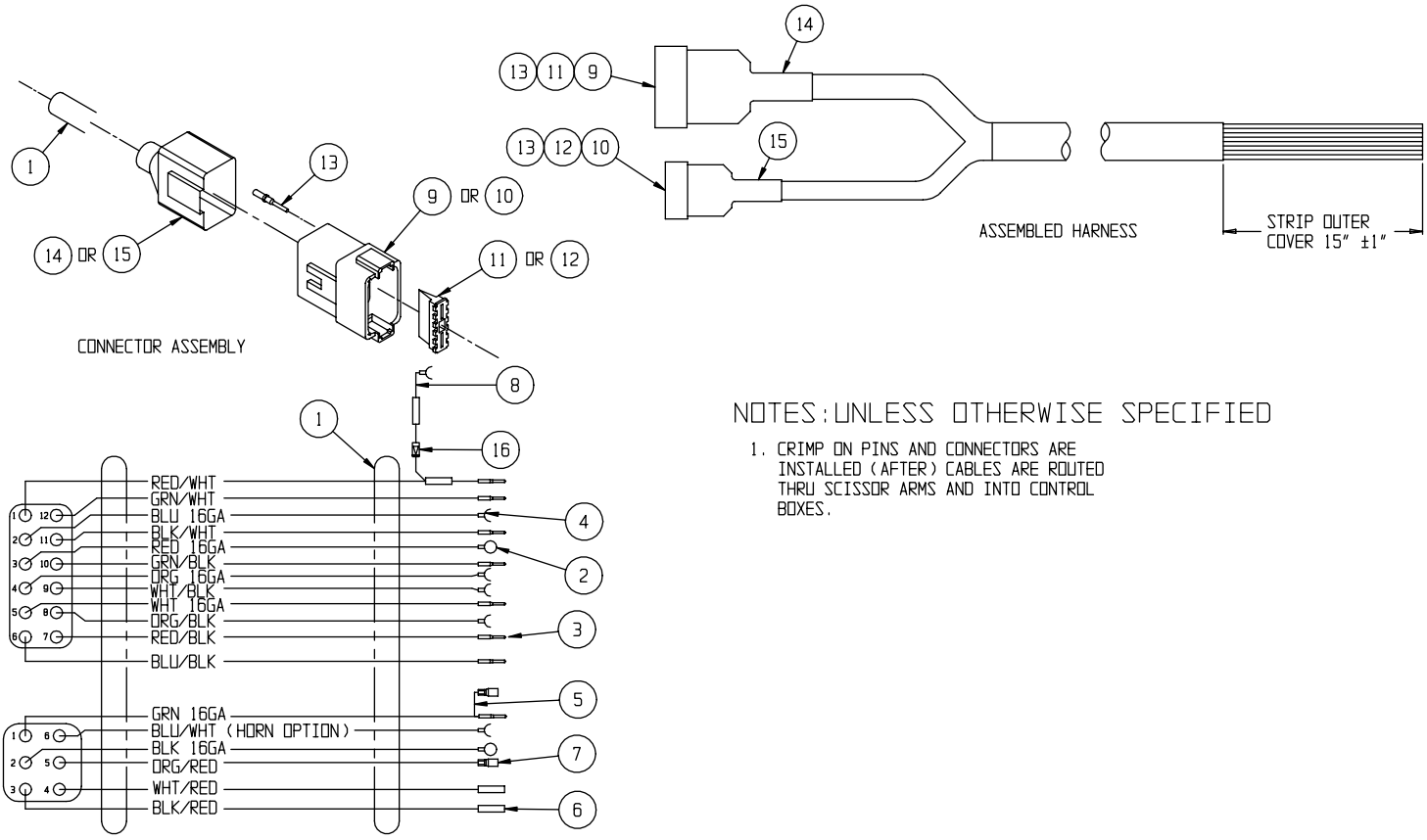

NOTES: UNLESS OTHERWISE SPECIFIED

1. CRIMP ON PINS AND CONNECTORS ARE INSTALLED (AFTER) CABLES ARE ROUTED THRU SCISSOR ARMS AND INTO CONTROL BOXES.

POWER MODULE, LX50
TWO-WHEEL DRIVE, DUAL FUEL
067522-010

ITEM	PART NO.	DESCRIPTION	QTY.
1	067809-002	HINGE, 2 X 65	1
2	067811-002	POWER MODULE WELDMENT	1
3	067800-001	MODULE DOOR, R.H.	1
4	067801-001	MODULE DOOR, L.H.	1
5	067799-006	MODULE COVER	1
6	067808-000	HINGE, 2 X 22	2
7	026554-002	POP RIVET, 1/4 DIA. (.251 - .375 GRIP)	32
8	005299-000	LATCH, TOGGLE	2
9	067629-000	LATCH, FLUSH LIFT & TURN	2
10	067523-010	ENGINE ASSY, DUAL FUEL KUBOTA	1
11	011939-021	FITTING 12MP-12MJ	1
12	014220-009	FITTING 16MP-12FP	1
13	063935-001	SUCTION SCREEN	1
14	067841-000	TANK, HYDRAULIC	1
16	025427-002	HANDLE	1
17	026533-002	RIVET POP, 3/16D .126 -.250 GRIP	4
18	067856-000	STIFFENER BAR	1
19	011708-004	SCREW RD HD 8-32 X 1/2	4
20	011248-002	NUT HEX 8-32 ESNA	4
21	011254-006	SCREW HHC 3/8-16 X 3/4	2
22	064039-001	HYDRAULIC TANK MOUNTING TAB	1
23	067624-000	HYDRAULIC FILTER	1
*	067624-010	FILTER ELEMENT	1
24	011916-011	ELBOW 90° 20FP-20FP (1-1/4 NPT)	1
25	067854-000	ANGLE RES. MOUNT	1
26	011240-006	WASHER 3/8 FLAT STD	26
27	011254-008	SCREW HHC 3/8-16 X 1	12
28	011248-006	NUT HEX 3/8-16 ESNA	14
29	063650-012	SPRING, PRESSURIZED GAS	1
30	067648-008	END FITTING, GAS SPRING	REF
31	015936-004	SCREW SHOULDER 3/8Ø X 1/2	2
33	011939-030	FITTING 20MP-20MJ	1

ITEM	PART NO.	DESCRIPTION	QTY.
34	011923-008	FITTING 12MP-6FP	1
35	011940-008	FITTING 90° 6MP-4MJ	1
36	067898-000	RADIATOR COVER	1
37	063930-001	BREATHER/FILLER CAP	1
38	021305-007	PLUG, MAGNETIC	1
39	067696-000	EXHAUST TUBE, DUAL FUEL	1
40	067902-000	BRACKET, GAS SPRING	1
41	010070-099	SEAL STRIP GASKET	FT 2.54
42	067691-001	SNORKEL WELDMENT, DUAL FUEL	1
43	013259-007	MUFFLER CLAMP 1 3/4	1
44	067697-000	BREATHER SPACER (RADIATOR)	1
45	011252-008	SCREW HHC 1/4-20 X 1	10
46	011240-004	WASHER FLAT STD 1/4	10
47	064462-023	PLUG, 3/8 CAP	2
48	013259-006	CLAMP, MUFFLER 1-1/2”	2
49	063979-006	GAGE, LUBE SIGHT	1
50	011248-004	NUT HEX ESNA 1/4-20	6
51	066697-099	PIPE INSULATION 1-3/8Ø	1
52	011248-005	NUT HEX 5/16-18 ESNA	2
53	011253-007	SCREW HHC 5/16-18 X 7/8	4
54	011240-005	WASHER 5/16 FLAT STD	4
55	011238-005	WASHER LOCK 5/16	4
56	011250-005	NUT HEX 5/16-18	4
59	011939-013	FITTING 8MP-4MJ	1
60	011939-015	FITTING 8MP-8MJ	1
61	011939-014	FITTING 8MP-6MJ	1
62	063936-024	MUFFLER GASKET	1
63	067765-000	TUBE EXTENSION	1
64	011253-008	SCREW, HHC 5/16-18 X 1	2
65	011248-005	NUT, HEX 5/16-18 ESNA	2

*Not Shown

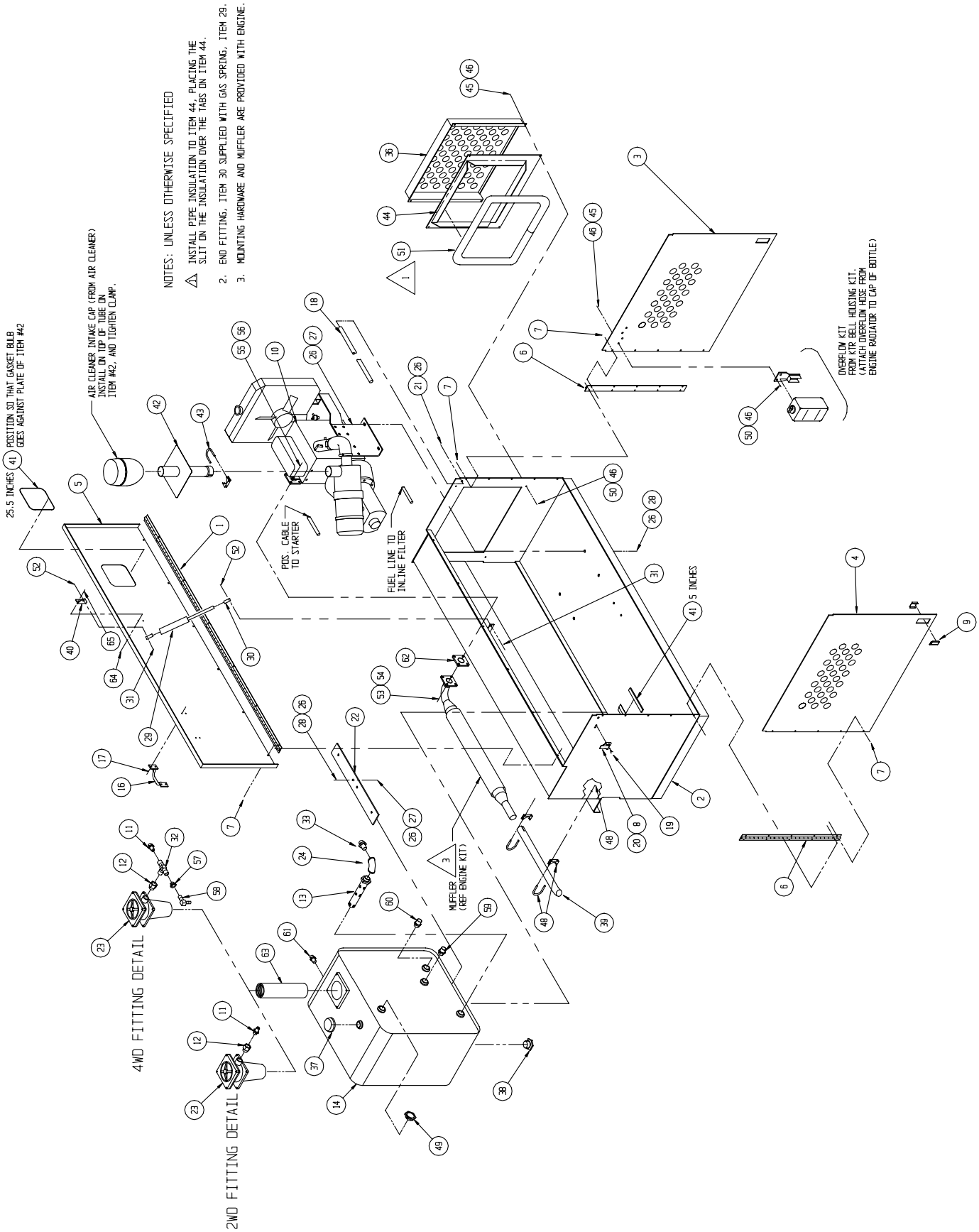
NOTES: UNLESS OTHERWISE SPECIFIED
1. INSTALL PIPE INSULATION TO ITEM 44, PLACING THE SLIT ON THE INSULATION OVER THE TABS ON ITEM 44.
2. END FITTING, ITEM 30 SUPPLIED WITH GAS SPRING, ITEM 29.
3. MOUNTING HARDWARE AND MUFFLER ARE PROVIDED WITH ENGINE.
25.5 INCHES
POSITION SO THAT GASKET BULB GOES AGAINST PLATE OF ITEM #42
AIR CLEANER INTAKE CAP (FROM AIR CLEANER) INSTALL ON TOP OF TUBE ON ITEM #42, AND TIGHTEN CLAMP.
POS. CABLE TO STARTER
FUEL LINE TO INLINE FILTER
MUFFLER (REF ENGINE KIT)
OVERFLOW KIT FROM KTR BELL HOUSING KIT. (ATTACH OVERFLOW HOSE FROM ENGINE RADIATOR TO CAP OF BOTTLE)
15 INCHES
4WD FITTING DETAIL
2WD FITTING DETAIL

POWER MODULE, LX50
FOUR-WHEEL DRIVE, DUAL FUEL
067522-011

ITEM	PART NO.	DESCRIPTION	QTY.
1	067809-002	HINGE, 2 X 65	1
2	067811-002	POWER MODULE WELDMENT	1
3	067800-001	MODULE DOOR, R.H.	1
4	067801-001	MODULE DOOR, L.H.	1
5	067799-005	MODULE COVER	1
6	067808-000	HINGE, 2 X 22	2
7	026554-002	POP RIVET, 1/4 DIA. (.251 - .375 GRIP)	32
8	005299-000	LATCH, TOGGLE	2
9	067629-000	LATCH, FLUSH LIFT & TURN	2
10	067523-010	ENGINE ASSY, DUAL FUEL KUBOTA	1
11	011939-021	FITTING 12MP-12MJ	1
12	014220-009	FITTING 16MP-12FP	1
13	063935-001	SUCTION SCREEN	1
14	067841-000	TANK, HYDRAULIC	1
16	025427-002	HANDLE	1
17	026533-002	RIVET POP, 3/16D .126 -.250 GRIP	4
18	067856-000	STIFFENER BAR	1
19	011708-004	SCREW RD HD 8-32 X 1/2	4
20	011248-002	NUT HEX 8-32 ESNA	4
21	011254-006	SCREW HHC 3/8-16 X 3/4	2
22	064039-001	HYDRAULIC TANK MOUNTING TAB	1
23	067624-000	HYDRAULIC FILTER	1
*	067624-010	FILTER ELEMENT	1
24	011916-011	ELBOW 90° 20FP-20FP (1-1/4 NPT)	1
25	067854-000	ANGLE RES. MOUNT	1
26	011240-006	WASHER 3/8 FLAT STD	26
27	011254-008	SCREW HHC 3/8-16 X 1	12
28	011248-006	NUT HEX 3/8-16 ESNA	14
29	063650-012	SPRING, PRESSURIZED GAS	1
30	067648-008	END FITTING, GAS SPRING	REF
31	015936-004	SCREW SHOULDER 3/8Ø X 1/2	2
32	014902-005	FITTING TEE 12MP-12FP	1
33	011939-030	FITTING 20MP-20MJ	1

ITEM	PART NO.	DESCRIPTION	QTY.
34	011923-008	FITTING 12MP-6FP	1
35	011940-008	FITTING 90° 6MP-4MJ	1
36	067898-000	RADIATOR COVER	1
37	063930-001	BREATHER/FILLER CAP	1
38	021305-007	PLUG, MAGNETIC	1
39	067696-000	EXHAUST TUBE, DUAL FUEL	1
40	067902-000	BRACKET, GAS SPRING	1
41	010070-099	SEAL STRIP GASKET	FT 2.54
42	067691-001	SNORKEL WELDMENT, DUAL FUEL	1
43	013259-007	MUFFLER CLAMP 1 3/4	1
44	067697-000	BREATHER SPACER (RADIATOR)	1
45	011252-008	SCREW HHC 1/4-20 X 1	10
46	011240-004	WASHER FLAT STD 1/4	10
47	064462-023	PLUG, 3/8 CAP	2
48	013259-006	CLAMP, MUFFLER 1-1/2”	2
49	063979-006	GAGE, LUBE SIGHT	1
50	011248-004	NUT HEX ESNA 1/4-20	6
51	066697-099	PIPE INSULATION 1-3/8Ø	1
52	011248-005	NUT HEX 5/16-18 ESNA	2
53	011253-007	SCREW HHC 5/16-18 X 7/8	4
54	011240-005	WASHER 5/16 FLAT STD	4
55	011238-005	WASHER LOCK 5/16	4
56	011250-005	NUT HEX 5/16-18	4
57	011923-007	FITTING 12MP-4FP	1
58	011940-004	FITTING 90°-4MP-4MJ	1
59	011939-013	FITTING 8MP-4MJ	1
60	011939-015	FITTING 8MP-8MJ	1
61	011939-014	FITTING 8MP-6MJ	1
62	063936-024	MUFFLER GASKET	1
63	067765-000	TUBE EXTENSION	1
64	011253-008	SCREW, HHC 5/16-18 X 1	2
65	011248-005	NUT, HEX 5/16-18 ESNA	2

*Not Shown

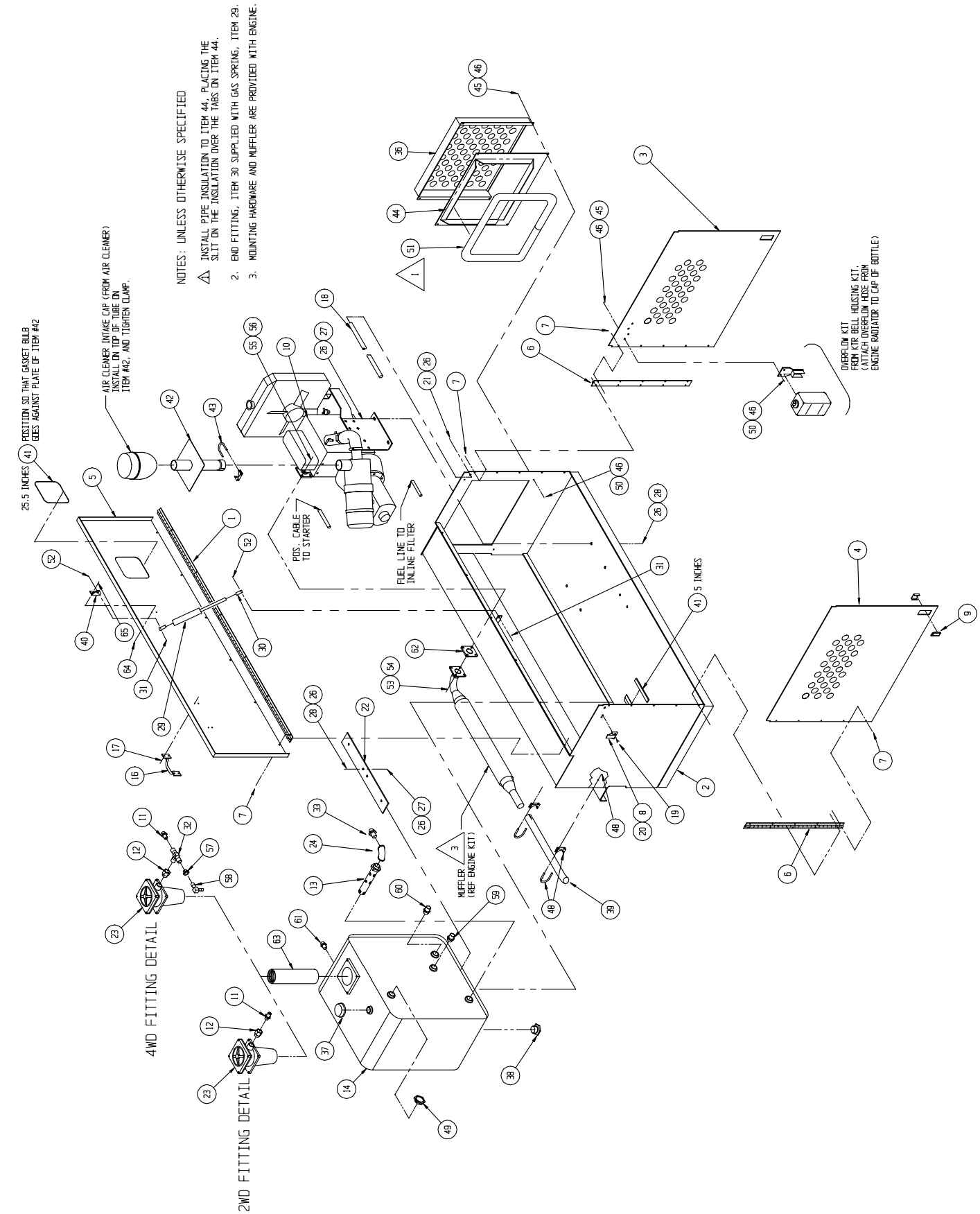
NOTES: UNLESS OTHERWISE SPECIFIED
1. INSTALL PIPE INSULATION TO ITEM 44, PLACING THE SLIT ON THE INSULATION OVER THE TABS ON ITEM 44.
2. END FITTING, ITEM 30 SUPPLIED WITH GAS SPRING, ITEM 29.
3. MOUNTING HARDWARE AND MUFFLER ARE PROVIDED WITH ENGINE.
25.5 INCHES
POSITION SO THAT GASKET BULB GOES AGAINST PLATE OF ITEM #42
AIR CLEANER INTAKE CAP (FROM AIR CLEANER) INSTALL ON TOP OF TUBE ON ITEM #42, AND TIGHTEN CLAMP.
POS. CABLE TO STARTER
FUEL LINE TO INLINE FILTER
5 INCHES
OVERFLOW KIT FROM KTR BELL HOUSING KIT. (ATTACH OVERFLOW HOSE FROM ENGINE RADIATOR TO CAP OF BOTTLE)
MUFFLER (REF ENGINE KIT)
4WD FITTING DETAIL
2WD FITTING DETAIL

POWER MODULE, LX50
TWO-WHEEL DRIVE, DIESEL
067522-012

ITEM	PART NO.	DESCRIPTION	QTY.
1	067809-002	HINGE, 2 X 65	1
2	067811-002	POWER MODULE WELDMENT	1
3	067800-001	MODULE DOOR, R.H.	1
4	067801-001	MODULE DOOR, L.H.	1
5	067799-000	MODULE COVER	1
6	067808-000	HINGE, 2 X 22	2
7	026554-002	POP RIVET, 1/4 DIA. (.251 - .375 GRIP)	32
8	005299-000	LATCH, TOGGLE	2
9	067629-000	LATCH, FLUSH LIFT & TURN	2
10	067523-011	ENGINE ASSY, DIESEL KUBOTA	1
11	011939-021	FITTING 12MP-12MJ	1
12	014220-009	FITTING 16MP-12FP	1
13	063935-001	SUCTION SCREEN	1
14	067841-000	TANK, HYDRAULIC	1
16	025427-002	HANDLE	1
17	026533-002	RIVET POP, 3/16D .126 -.250 GRIP	4
18	067856-000	STIFFENER BAR	1
19	011708-004	SCREW RD HD 8-32 X 1/2	4
20	011248-002	NUT HEX 8-32 ESNA	4
21	011254-006	SCREW HHC 3/8-16 X 3/4	2
22	064039-001	HYDRAULIC TANK MOUNTING TAB	1
23	067624-000	HYDRAULIC FILTER	1
24	011916-011	ELBOW 90° 20FP-20FP (1-1/4 NPT)	1
25	067854-000	ANGLE RES. MOUNT	1
26	011240-006	WASHER 3/8 FLAT STD	26
27	011254-008	SCREW HHC 3/8-16 X 1	12
28	011248-006	NUT HEX 3/8-16 ESNA	14
29	063650-012	SPRING, PRESSURIZED GAS	1
30	067648-008	END FITTING, GAS SPRING	REF
31	015936-004	SCREW SHOULDER Ø 3/8 X 1/2	2
33	011939-030	FITTING 20MP-20MJ	1

ITEM	PART NO.	DESCRIPTION	QTY.
34	011923-008	FITTING 12MP-6FP	1
35	011940-008	FITTING 90° 6MP-4MJ	1
36	067898-000	RADIATOR COVER	1
37	063930-001	BREATHER/FILLER CAP	1
38	021305-007	PLUG, MAGNETIC	1
39	067696-001	EXHAUST TUBE, DUAL FUEL	1
40	067902-000	BRACKET, GAS SPRING	1
41	010070-099	SEAL STRIP GASKET	2.54 FT
42	067691-001	SNORKEL WELDMENT, DUAL FUEL	1
43	013259-008	MUFFLER CLAMP 1 3/4	1
44	067697-001	BREATHER SPACER (RADIATOR)	1
45	011252-008	SCREW HHC 1/4-20 X 1	10
46	011240-004	WASHER FLAT STD 1/4	10
47	064462-023	PLUG, 3/8 CAP	2
48	013259-006	CLAMP, MUFFLER 1-1/2”	2
49	063979-006	GAGE, LUBE SIGHT	1
50	011248-004	NUT HEX ESNA 1/4-20	6
51	066697-099	PIPE INSULATION 1-3/8Ø	1
52	011248-005	NUT HEX 5/16-18 ESNA	2
53	011253-007	SCREW HHC 5/16-18 X 7/8	4
54	011240-005	WASHER 5/16 FLAT STD	4
55	011238-005	WASHER LOCK 5/16	4
56	011250-005	NUT HEX 5/16-18	4
59	011939-013	FITTING 8MP-4MJ	1
60	011939-015	FITTING 8MP-8MJ	1
61	011939-014	FITTING 8MP-6MJ	1
62	063936-024	MUFFLER GASKET	1
63	067765-000	TUBE EXTENSION	1
64	011253-008	SCREW, HHC 5/16-18 X 1	2
65	011248-005	NUT, HEX 5/16-18 ESNA	2

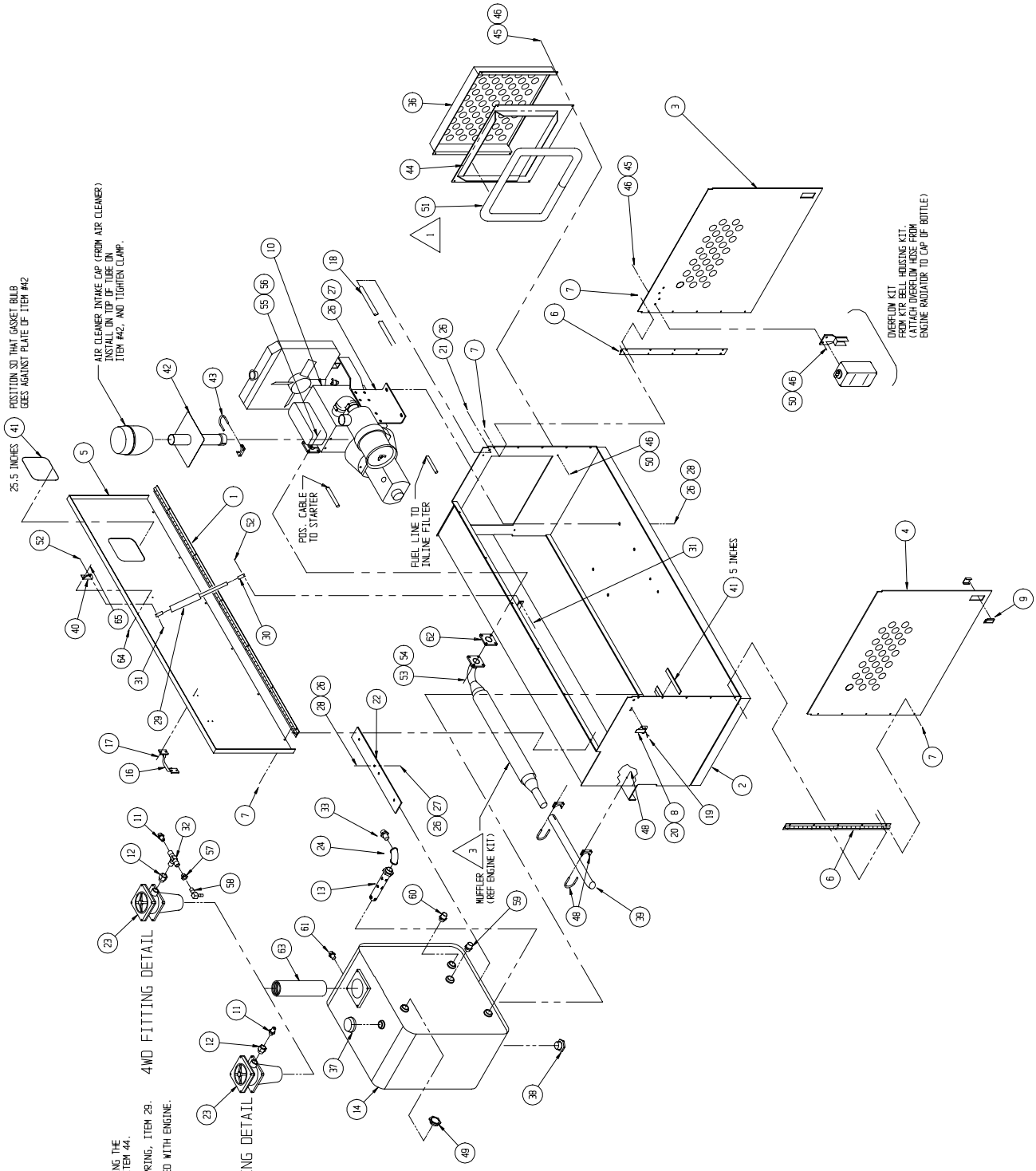

NOTES: UNLESS OTHERWISE SPECIFIED

1. INSTALL PIPE INSULATION TO ITEM 44, PLACING THE SLIT ON THE INSULATION OVER THE TABS ON ITEM 44.
2. END FITTING, ITEM 30 SUPPLIED WITH GAS SPRING, ITEM 29.
3. MOUNTING HARDWARE AND MUFFLER ARE PROVIDED WITH ENGINE.

POWER MODULE, LX50
FOUR-WHEEL DRIVE, DIESEL
067522-013

ITEM	PART NO.	DESCRIPTION	QTY.
1	067809-002	HINGE, 2 X 65	1
2	067811-002	POWER MODULE WELDMENT	1
3	067800-001	MODULE DOOR, R.H.	1
4	067801-001	MODULE DOOR, L.H.	1
5	067799-000	MODULE COVER	1
6	067808-000	HINGE, 2 X 22	2
7	026554-002	POP RIVET, 1/4 DIA. (.251 - .375 GRIP)	32
8	005299-000	LATCH, TOGGLE	2
9	067629-000	LATCH, FLUSH LIFT & TURN	2
10	067523-011	ENGINE ASSY, DIESEL KUBOTA	1
11	011939-021	FITTING 12MP-12MJ	1
12	014220-009	FITTING 16MP-12FP	1
13	063935-001	SUCTION SCREEN	1
14	067841-000	TANK, HYDRAULIC	1
16	025427-002	HANDLE	1
17	026533-002	RIVET POP, 3/16D .126 -.250 GRIP	4
18	067856-000	STIFFENER BAR	1
19	011708-004	SCREW RD HD 8-32 X 1/2	4
20	011248-002	NUT HEX 8-32 ESNA	4
21	011254-006	SCREW HHC 3/8-16 X 3/4	2
22	064039-001	HYDRAULIC TANK MOUNTING TAB	1
23	067624-000	HYDRAULIC FILTER	1
24	011916-011	ELBOW 90° 20FP-20FP (1-1/4 NPT)	1
25	067854-000	ANGLE RES. MOUNT	1
26	011240-006	WASHER 3/8 FLAT STD	26
27	011254-008	SCREW HHC 3/8-16 X 1	12
28	011248-006	NUT HEX 3/8-16 ESNA	14
29	063650-012	SPRING, PRESSURIZED GAS	1
30	067648-008	END FITTING, GAS SPRING	REF
31	015936-004	SCREW SHOULDER Ø 3/8 X 1/2	2
32	014902-005	FITTING TEE 12MP-12FP	1
33	011939-030	FITTING 20MP-20MJ	1

ITEM	PART NO.	DESCRIPTION	QTY.
34	011923-008	FITTING 12MP-6FP	1
35	011940-008	FITTING 90° 6MP-4MJ	1
36	067898-000	RADIATOR COVER	1
37	063930-001	BREATHER/FILLER CAP	1
38	021305-007	PLUG, MAGNETIC	1
39	067696-001	EXHAUST TUBE, DUAL FUEL	1
40	067902-000	BRACKET, GAS SPRING	1
41	010070-099	SEAL STRIP GASKET	2.54 FT
42	067691-001	SNORKEL WELDMENT, DUAL FUEL	1
43	013259-008	MUFFLER CLAMP 1 3/4	1
44	067697-001	BREATHER SPACER (RADIATOR)	1
45	011252-008	SCREW HHC 1/4-20 X 1	10
46	011240-004	WASHER FLAT STD 1/4	10
47	064462-023	PLUG, 3/8 CAP	2
48	013259-006	CLAMP, MUFFLER 1-1/2”	2
49	063979-006	GAGE, LUBE SIGHT	1
50	011248-004	NUT HEX ESNA 1/4-20	6
51	066697-099	PIPE INSULATION 1-3/8Ø	1
52	011248-005	NUT HEX 5/16-18 ESNA	2
53	011253-007	SCREW HHC 5/16-18 X 7/8	4
54	011240-005	WASHER 5/16 FLAT STD	4
55	011238-005	WASHER LOCK 5/16	4
56	011250-005	NUT HEX 5/16-18	4
57	011923-007	FITTING 12MP-4FP	1
58	011940-004	FITTING 90°-4MP-4MJ	1
59	011939-013	FITTING 8MP-4MJ	1
60	011939-015	FITTING 8MP-8MJ	1
61	011939-014	FITTING 8MP-6MJ	1
62	063936-024	MUFFLER GASKET	1
63	067765-000	TUBE EXTENSION	1
64	011253-008	SCREW, HHC 5/16-18 X 1	2
65	011248-005	NUT, HEX 5/16-18 ESNA	2

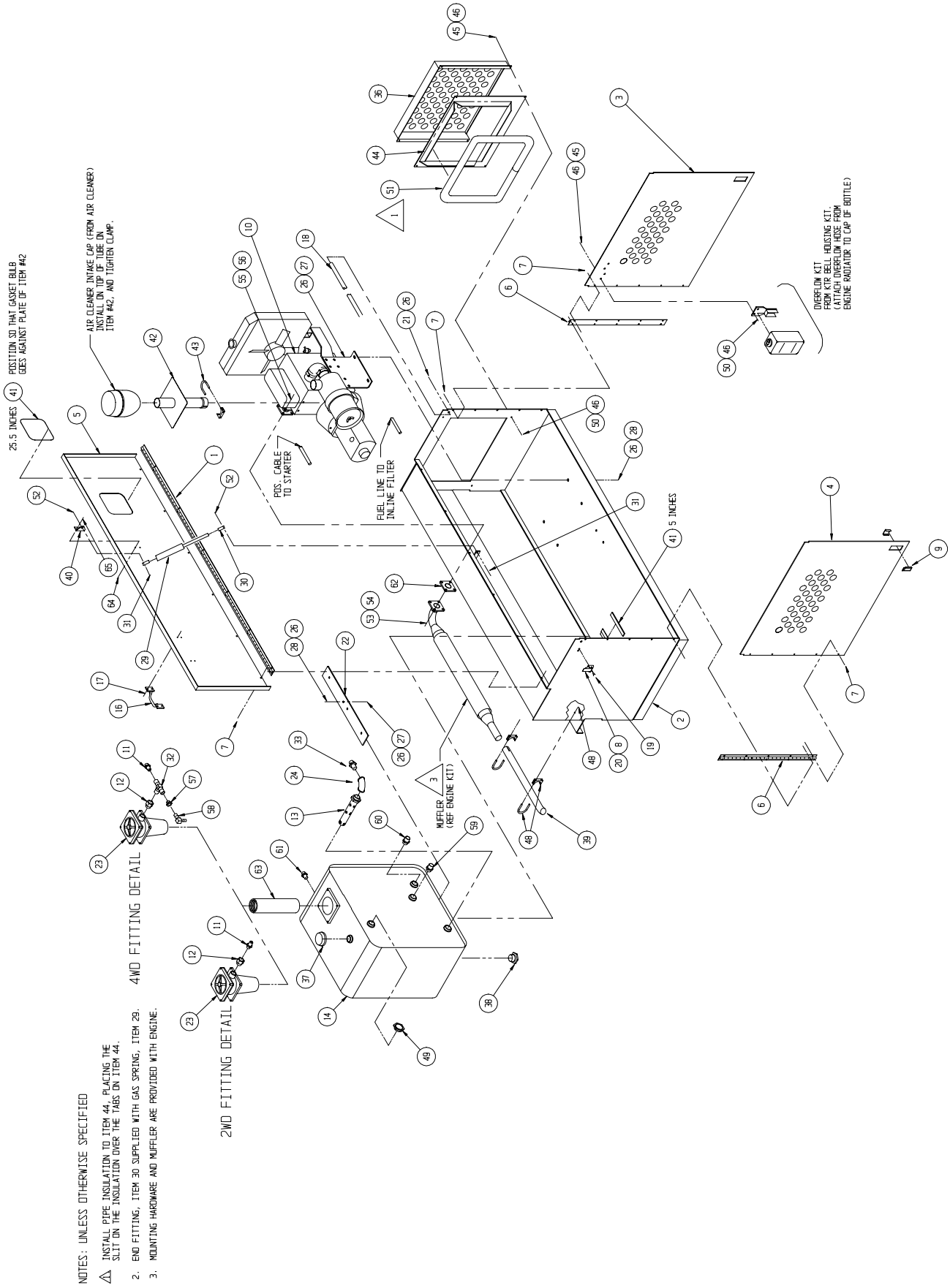

NOTES: UNLESS OTHERWISE SPECIFIED

1. INSTALL PIPE INSULATION TO ITEM 44, PLACING THE SLIT ON THE INSULATION OVER THE TABS ON ITEM 44.
2. END FITTING, ITEM 30 SUPPLIED WITH GAS SPRING, ITEM 29.
3. MOUNTING HARDWARE AND MUFFLER ARE PROVIDED WITH ENGINE.

ENGINE ASSEMBLY, LX50
KUBOTA DUAL FUEL
067523-010

ITEM	PART NO.	DESCRIPTION	QTY.
1	067824-000	ENGINE, KUBOTA DUEL FUEL (D/F750E)	1
2	067608-000	PUMP, VARIABLE DISPLACEMENT	1
3	063941-000	SOLENOID, THROTTLE	1
4	012733-099	HOSE, FUEL LINE Ø 5/16	FT 9
5	020541-001	HOSE CLAMP	6
6	REF	FUEL FILTER, INLINE	1
7	067492-004	WIRE HARNESS, DUAL FUEL ENGINE	1
8	011252-006	SCREW HHC 1/4-20 X 3/4	10
9	067874-000	BRACKET, ENGINE MOUNT GAS	2
10	067615-042	ENGINE ACCESSORY KIT	1
11	067872-001	BRACKET, AIR CLEANER	1
12	011254-008	SCREW HHC 3/8-16 X 1	2
13	064177-004	WELDMENT, MUFFLER SPACER	1
14	REF	COIL, IGNITION	1
15	067599-000	SOLENOID, CHOKE	1
16	011240-005	WASHER FLAT STD 5/16	2
17	011248-005	NUT HEX 5/16-18 ESNA	2
18	011935-004	FITTING 8MBH-8MJ 45°	1
19	067871-000	BRACKET, SOLENOID	1
20	011254-010	SCREW HHC 3/8-16UNC X 1-1/4	4
21	011238-006	LOCKWASHER, SPLIT 3/8	6
22	067670-012	SPLIT FLANGE - HALF 3/4	2
23	067671-012	”O”-RING	1
24	067671-020	”O”-RING	1
25	014338-008	FITTING SPLIT FLANGE - 20MJ 90°	1
26	067670-020	SPLIT FLANGE - 1-1/4	2
27	011255-010	SCREW HHC 7/16-14UNC X 1-1/4	4
28	011238-007	LOCK WASHER SPLIT 7/16	4
29	011253-014	SCREW HHC 5/16-18UNC X 1 3/4	2
30	011252-008	SCREW HHC 1/4-20UNC X 1	2
31	011240-004	WASHER FLAT STD 1/4	6

ITEM	PART NO.	DESCRIPTION	QTY.
32	011238-004	WASHER SPLIT LOCK 1/2	2
33	011248-004	NUT HEX 1/4-20 ESNA	10
34	067617-020	KTR BELL HOUSING KIT D/F #0034	1
35	011256-010	SCREW HHC 1/2-13UNC X 1-1/4	2
36	011941-001	FITTING STR 4MB-4MJ	1
37	064183-000	SPACER, ENGINE	2
38	011937-001	FITTING 90° 4FJ-4MJ	1
39	011240-006	WASHER FLAT STD 3/8	2
40	063946-030	SCREW HHC M10 X 1.25 GR5 X 30MM	14
41	REF	SCREW (SUPPLIED W/ AIR CLEANER)	2
42	REF	SCREW MANIFOLD (SUPPLIED W/ ENGINE)	4
43	011709-004	SCREW RD HD 10-24UNC X 1/2	2
44	011248-003	NUT HEX ESNA 10-24UNC	2
45	014914-001	CONN. MALE PUSH, 16-14 AWG, .25 TAB	9
46	REF	ELECTRIC FUEL PUMP	1
47	011261-004	SCREW HHC 1/4-28 UNF	2
48	030624-019	CHOKE ANGLE	1
49	030624-020	CHOKE ROD	1
50	030624-008	CHOKE SOLENOID BRACKET	1
51	011240-007	WASHER FLAT STD 7/16	12
52	014338-002	FITTING 12FL-12MJ 90°	1
53	063945-001	OIL PRESS SWITCH	1
54	003142-001	FITTING 2MP-2FP	1
55	067807-000	SOLENOID BRACKET	1
56	020495-004	NUT HEX JAM 1/4-28UNF	1
57	011847-004	YOKE END	1
58	020731-005	CHAIN 4 LINKS	1
59	REF	SPRING LINKAGE	1
60	REF	LPG REGULATOR	1
61	067824-010	DUAL FUEL KIT (PROPANE)	1
62	020541-004	HOSE CLAMP (#8)	2

See page 6-84 for Engine Wiring

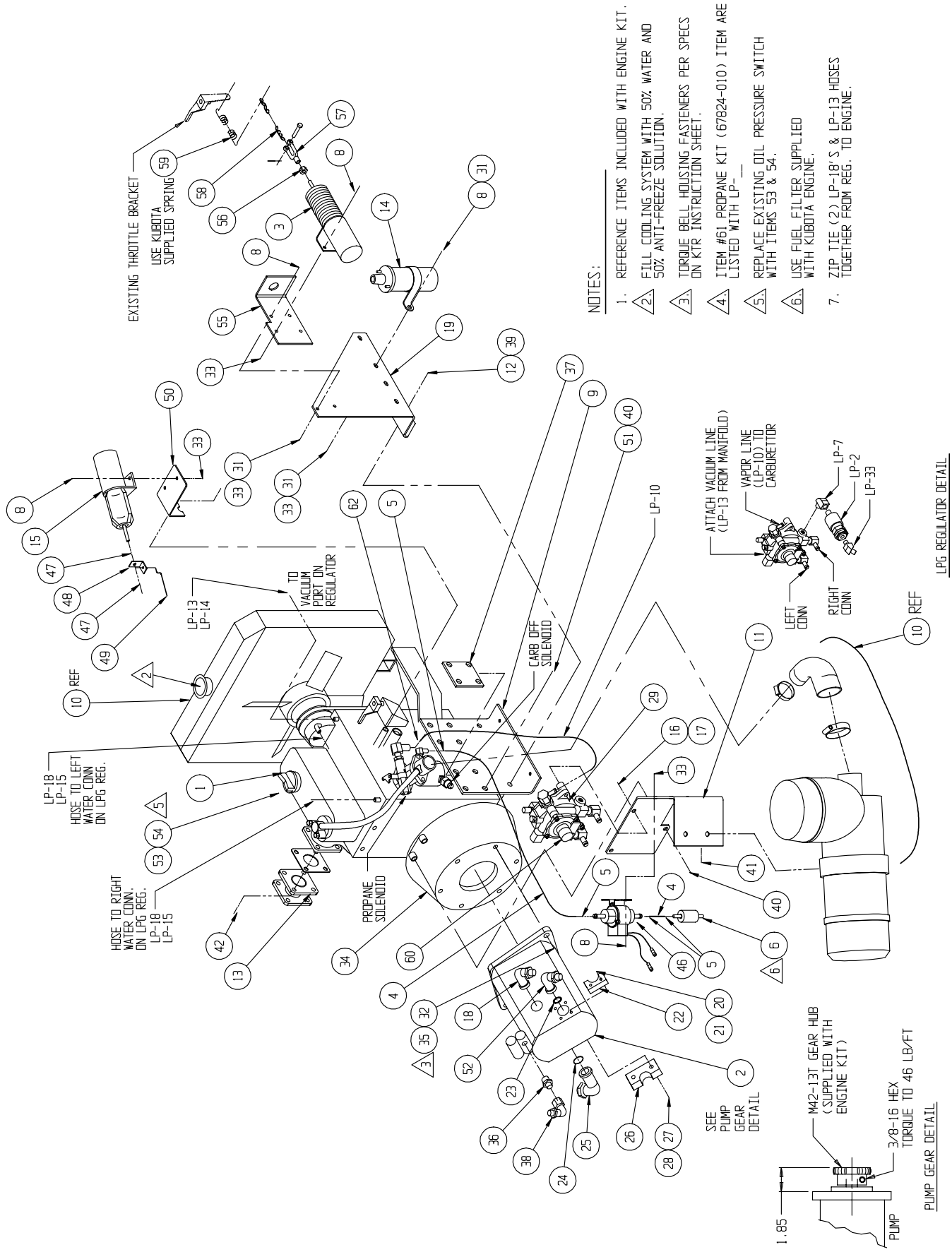
NOTES:
1. REFERENCE ITEMS INCLUDED WITH ENGINE KIT.
2. FILL COOLING SYSTEM WITH 50% WATER AND 50% ANTI-FREEZE SOLUTION.
3. TORQUE BELL HOUSING FASTENERS PER SPECS ON KTR INSTRUCTION SHEET.
4. ITEM #61 PROPANE KIT (67824-010) ITEM ARE LISTED WITH LP-__
5. REPLACE EXISTING OIL PRESSURE SWITCH WITH ITEMS 53 & 54.
6. USE FUEL FILTER SUPPLIED WITH KUBOTA ENGINE.
7. ZIP TIE (2) LP-18' S & LP-13 HOSES TOGETHER FROM REG. TO ENGINE.
EXISTING THROTTLE BRACKET
USE KUBOTA SUPPLIED SPRING
TO VACUUM PORT ON REGULATOR
LP-13
LP-14
LP-18
LP-15
HOSE TO LEFT WATER CONN ON LPG REG.
HOSE TO RIGHT WATER CONN. ON LPG REG.
LP-18
LP-15
PROPANE SOLENOID
CARB OFF SOLENOID
LP-10
ATTACH VACUUM LINE (LP-13 FROM MANIFOLD)
VAPOR LINE (LP-10) TO CARBURETTOR
LP-7
LP-2
LP-33
LEFT CONN
RIGHT CONN
LPG REGULATOR DETAIL
REF
SEE PUMP GEAR DETAIL
M42-13T GEAR HUB (SUPPLIED WITH ENGINE KIT)
3/8-16 HEX TORQUE TO 46 LB/FT
1.85
PUMP
PUMP GEAR DETAIL

ENGINE ASSEMBLY, LX50
KUBOTA DIESEL
067523-011

ITEM	PART NO.	DESCRIPTION	QTY.
1	067614-000	ENGINE, KUBOTA DIESEL	1
2	067608-000	PUMP, VARIABLE DISPLACEMENT	1
3	067599-000	SOLENOID, THROTTLE	1
4	012733-099	HOSE, FUEL LINE Ø 5/16	10 FT
5	020541-001	HOSE CLAMP	6
6	REF.	FUEL FILTER, INLINE	1
7	063945-001	OIL PRESSURE SWITCH	1
8	067492-005	WIRE HARNESS, DIESEL ENGINE	1
9	064180-001	ENGINE MOUNT BRACKET	2
10	REF	FUEL FILTER MOUNT - SPIN ON	1
11	067859-000	BRACKET, AIR CLEANER	1
12	REF	FUEL FILTER - SPIN ON	1
13	064177-004	WELDMENT, MUFFLER SPACER	1
14	011240-002	WASHER, STD FLAT #8	8
15	067870-000	BRACKET, DIESEL FUEL FILTER	1
16	064423-000	INLINE SWIVEL - 1/4	1
17	011760-004	ROD END BEARING - 1/4-28	1
18	011935-004	FITTING 8MBH-8MJ 45°	1
19	014338-002	FITTING SPLIT FLANGE - 12MJ 90°	1
20	011254-010	SCREW HHC 3/8-16UNC X 1-1/4	4
21	011238-006	LOCKWASHER, SPLIT 3/8	6
22	067670-012	SPLIT FLANGE - HALF 3/4	2
23	067671-012	”O”-RING	1
24	067671-020	”O”-RING	1
25	014338-008	FITTING SPLIT FLANGE - 20MJ 90°	1

ITEM	PART NO.	DESCRIPTION	QTY.
26	067670-020	SPLIT FLANGE - 1-1/4	2
27	011255-010	SCREW HHC 7/16-14UNC X 1-1/4	4
28	011238-007	LOCK WASHER SPLIT 7/16	4
29	011252-004	SCREW HHC 1/4-20UNC X 1/2	2
30	011252-008	SCREW HHC 1/4-20UNC X 1	3
31	011240-004	WASHER FLAT STD 1/4	2
32	011238-004	WASHER SPLIT LOCK 1/2	2
33	011248-004	NUT HEX 1/4 ESNA	3
34	067617-000	KTR BELL HOUSING KIT	1
35	011256-010	SCREW HHC 1/2-13UNC X 1-1/4	2
36	011941-001	FITTING STR 4MB-4MJ	1
37	064183-000	SPACER, ENGINE	2
38	011937-001	FITTING 90° 4FJ-4MJ	1
39	011708-006	SCREW MACH 8-32 UNC X 3/4	2
40	063946-030	SCREW HHC M10 X 1.25 GR5 X 30MM	12
41	REF	SCREW (SUPPLIED W/ AIR CLEANER)	2
42	REF	SCREW MANIFOLD (SUPPLIED W/ ENGINE)	4
43	03142-001	ADAPTER, 2MP-2FP	1
44	029601-039	CONN. RING, 12-10GA., 5/16Ø	1
45	011248-002	NUT, ESNA HEX 8-32 UNC	2
46	011240-007	WASHER FLAT STD 7/16	12
47	029416-099	WIRE, 12AWG, RED	1 FT
48	029601-020	CONN. RING, 12-10GA., 1/4Ø	1
49	014914-001	CONN. MALE PUSH, 16-14 AWG, .25 TAB	5
50	064180-002	RELAY MOUNT BRACKET	1

See page 6-85 for Engine Wiring

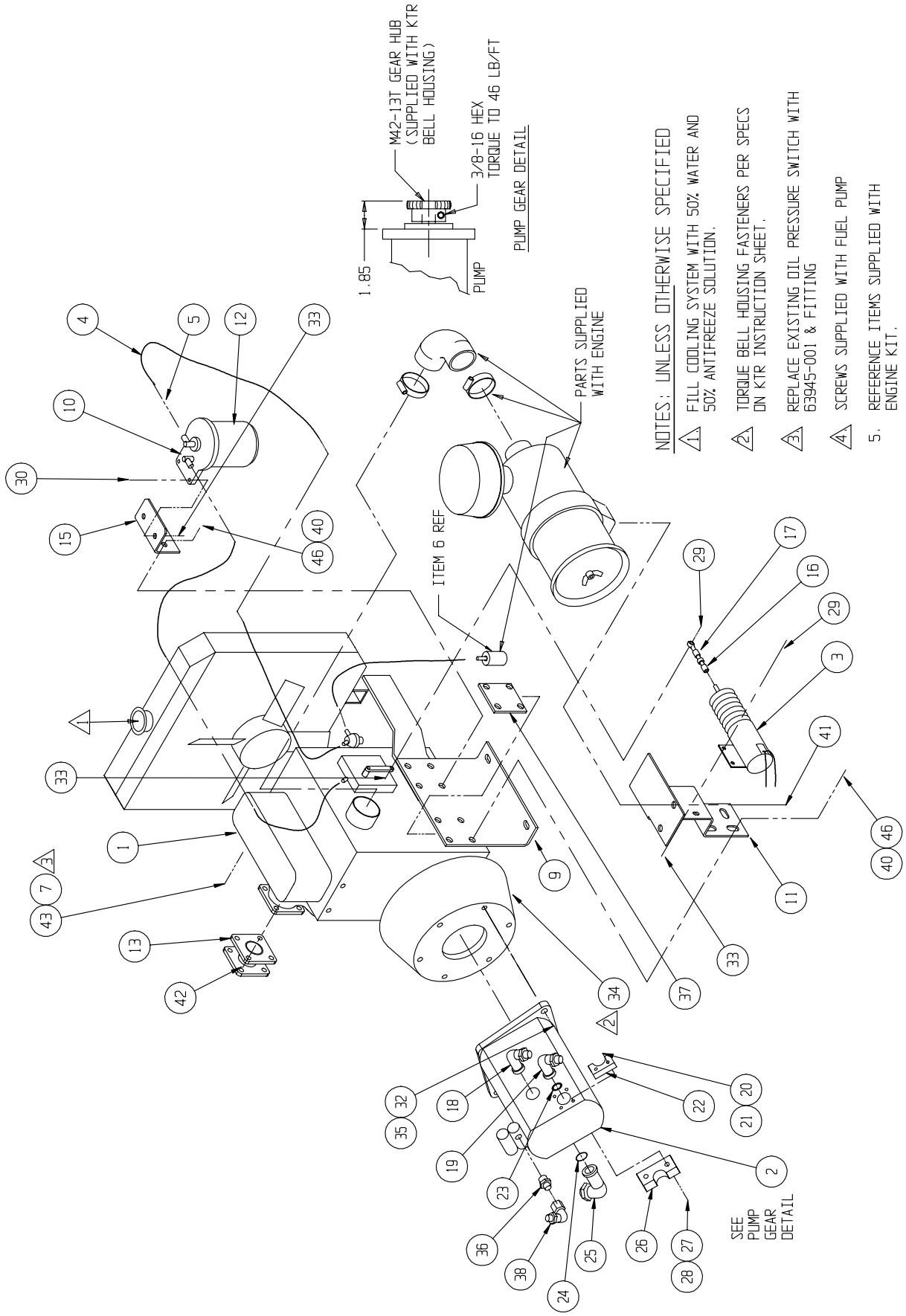
M42-13T GEAR HUB (SUPPLIED WITH KTR BELL HOUSING)
3/8-16 HEX TORQUE TO 46 LB/FT
PUMP GEAR DETAIL
1.85
PUMP
PARTS SUPPLIED WITH ENGINE
ITEM 6 REF
NOTES: UNLESS OTHERWISE SPECIFIED
1. FILL COOLING SYSTEM WITH 50% WATER AND 50% ANTIFREEZE SOLUTION.
2. TORQUE BELL HOUSING FASTENERS PER SPECS ON KTR INSTRUCTION SHEET.
3. REPLACE EXISTING OIL PRESSURE SWITCH WITH 63945-001 & FITTING
4. SCREWS SUPPLIED WITH FUEL PUMP
5. REFERENCE ITEMS SUPPLIED WITH ENGINE KIT.
SEE PUMP GEAR DETAIL

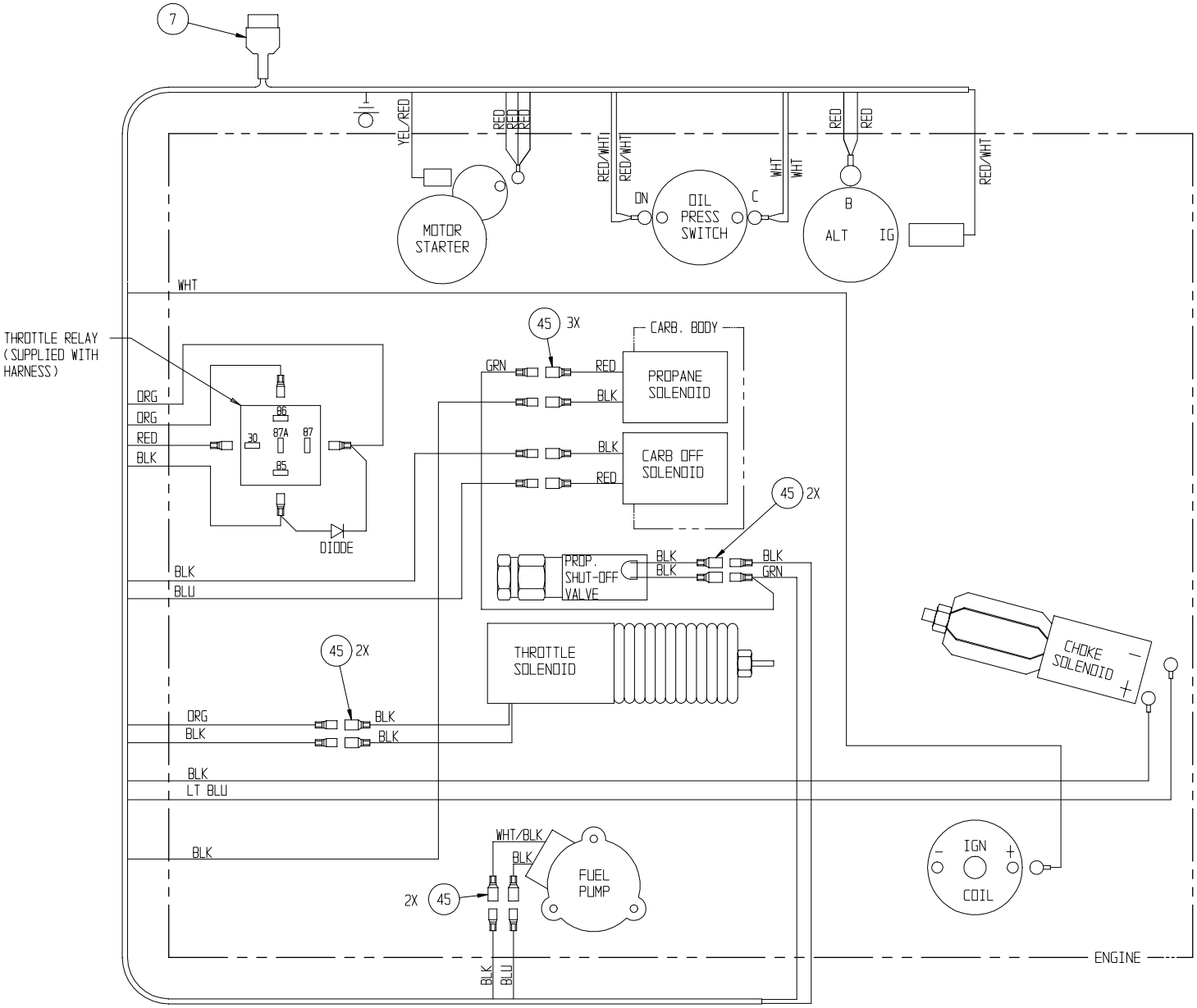

Engine Wiring Diagram, Dual Fuel

067523-010

Engine Wiring Diagram, Diesel

067523-011

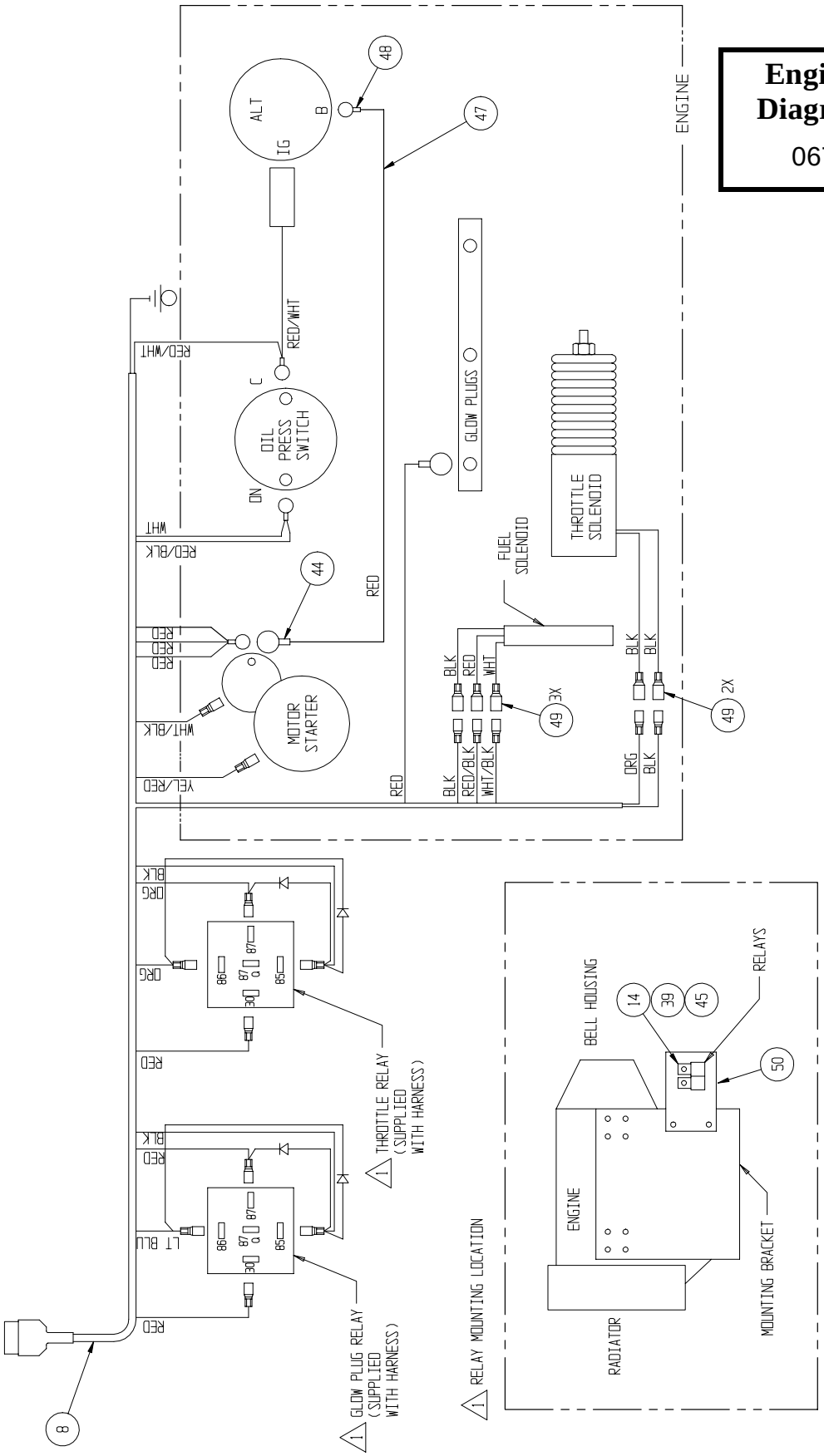

HOSE KIT INSTALLATION, LX50
TWO-WHEEL DRIVE, W/O OUTRIGGERS

067533-022

ITEM	PART NO.	DESCRIPTION	QTY.
1	067680-027	1-1/4 HOSE ASSY X 27 20FJX-20FJX 90°	1
3	067857-334	3/8 HOSE ASSY X 334 6FJX-6FJX 90°	1
4	067676-131	3/4 HOSE ASSY X 131 12FJX-12FJX 90°	1
6	067682-026	1/2 HOSE ASSY X 26 8FJX-8FJX 90°	1
7	067858-108	3/4 HOSE ASSY X 108 12FJX-12FJX	1
8	065234-096	1/4 HOSE ASSY X 96 4FJX-4FJX	1
10	060861-136	3/8 HOSE ASSY X 136 6FJX-6FJX	1
11	060861-141	3/8 HOSE ASSY X 141 6FJX-6FJX	1
12	060861-102	3/8 HOSE ASSY X 529 6FJX-6FJX	1
13	060861-103	3/8 HOSE ASSY X 370 6FJX-6FJX	2
15	067683-085	3/8 HOSE ASSY X 85 6FJX-6FJX45°	2
18	067677-144	5/8 HOSE ASSY X 144 10FJX-10FJX90°	2
19	067684-200	3/8 HOSE ASSY X 200 6FJX-6FJX90°	1
20	067677-112	5/8 HOSE ASSY X 112 10FJX-10FJX90°	2
21	065234-152	1/4 HOSE ASSY X 152 4FJX-4FJX	1
22	065234-014	1/4 HOSE ASSY X 46.5 4FJX-4FJX	1
24	065234-032	1/4 HOSE ASSY X 32 4FJX-4FJX	1
25	065234-001	1/4 HOSE ASSY X 20 4FJX-4FJX	1
26	068740-030	1/2 HOSE ASSY X 30 10FJX-8FJX	1
27	020733-004	TEE FITTING 10FJX-10MJX-10MJX	1
29	020032-001	FITTING 4MJ-4MJ TEE	REF

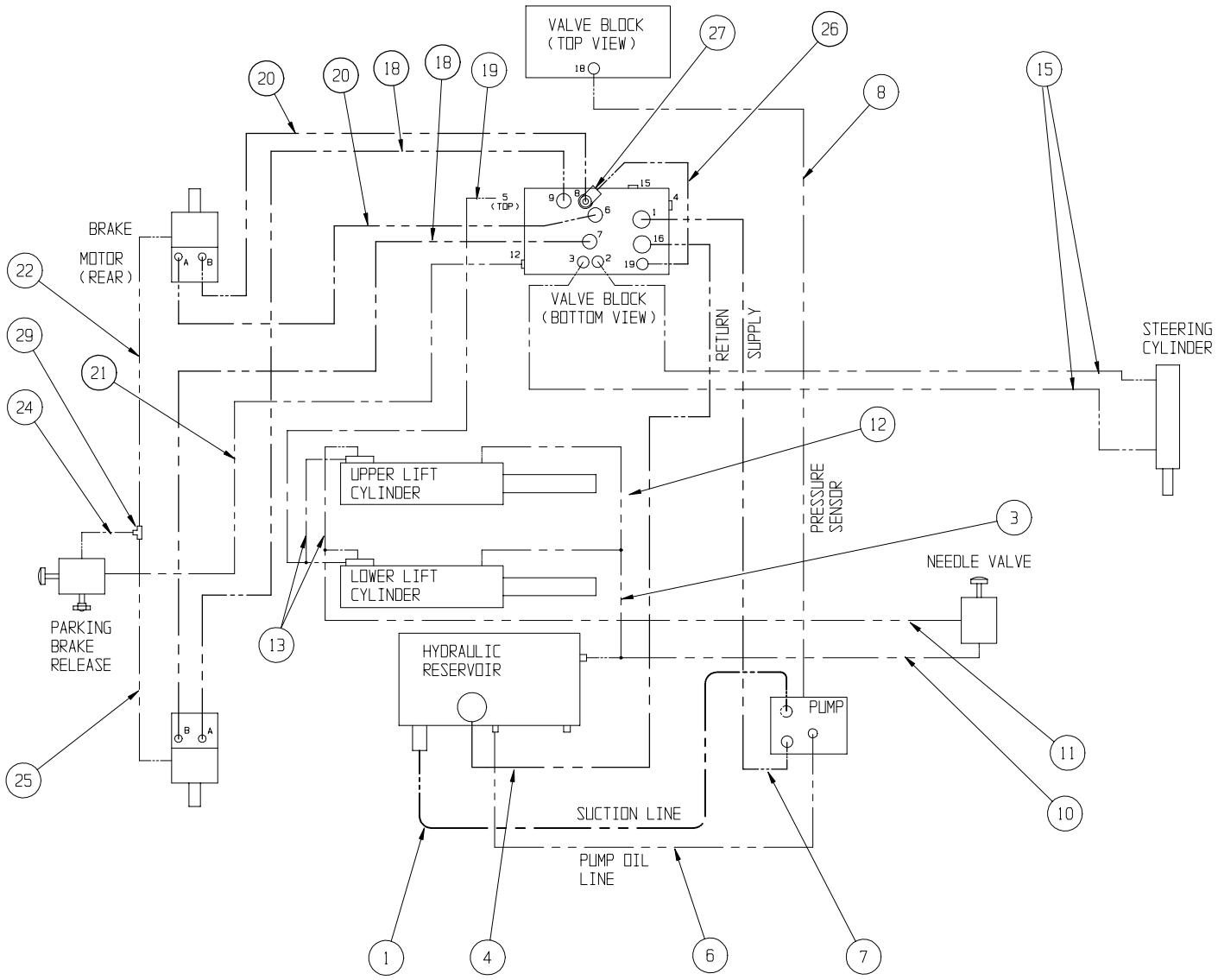
VALVE BLOCK
(TOP VIEW)
VALVE BLOCK
(BOTTOM VIEW)
BRAKE
MOTOR
(REAR)
RETURN
SUPPLY
STEERING
CYLINDER
UPPER LIFT
CYLINDER
LOWER LIFT
CYLINDER
PRESSURE
SENSOR
NEEDLE VALVE
PARKING
BRAKE
RELEASE
HYDRAULIC
RESERVOIR
PUMP
SUCTION LINE
PUMP OIL
LINE

HOSE KIT INSTALLATION, LX50
FOUR-WHEEL DRIVE, W/O OUTRIGGERS
067533-023

ITEM	PART NO.	DESCRIPTION	QTY.
1	067680-027	1-1/4 HOSE ASY X 27 20FJX-20FJX 90°	1
2	062192-009	1/4 HOSE ASSY X 65 4FJX-4FJX	1
3	067857-334	3/8 HOSE ASSY X 334 6FJX-6FJX90°	1
4	067676-131	3/4 HOSE ASSY X 131 12FJX-12FJX 90°	1
5	067681-120	1/4 HOSE ASSY X 120 4FJX-4FJX 90°	1
6	067682-026	1/2 HOSE ASSY X 26 8FJX-8FJX 90°	1
7	067858-108	3/4 HOSE ASSY X 108 12FJX-12FJX	1
8	065234-096	1/4 HOSE ASSY X 96 4FJX-4FJX	1
9	067679-044	1/2 HOSE ASSY X 44 10FJX-8FJX 45°	4
11	067681-080	1/4 HOSE ASSY X 80 4FJX-4FJX 90°	1
12	067918-008	1/8 HOSE ASSY X 8 4FJX-4FJX	2
13	067681-100	1/4 HOSE ASSY X 100 4FJX-4FJX 90°	1
14	067681-115	1/4 HOSE ASSY X 115 4FJX-4FJX 90°	1
15	067683-085	3/8 HOSE ASSY X 85 6FJX-6FJX 45°	2
16	067677-090	5/8 HOSE ASSY X 90 10FJX-10FJX 90°	1
17	067677-060	5/8 HOSE ASSY X 60 10FJX-10FJX 90°	1
18	067677-144	5/8 HOSE ASSY X 144 10FJX-10FX J90°	1
19	067684-200	3/8 HOSE ASSY X 200 6FJX-6FJX 90°	1
20	067677-112	5/8 HOSE ASSY X 112 10FJX-10FJX 90°	1
21	065234-152	1/4 HOSE ASSY X 152 4FJX-4FJX	1
22	065234-014	1/4 HOSE ASSY X 46.5 4FJX-4FJX	1
23	067687-061	5/8 HOSE ASSY X 61 10FJX90-10FJX90	1
24	065234-032	1/4 HOSE ASSY X 32 4FJX-4FJX	1
25	065234-001	1/4 HOSE ASSY X 20 4FJX-4FJX	1
26	067687-100	5/8 HOSE ASSY X 100 10FJX90-10FJX90	1

ITEM	PART NO.	DESCRIPTION	QTY.
27	068740-120	1/2 HOSE ASSY X 120 10FJX-8FJX	1
29	020032-001	FITTING 4MJ-4MJ TEE	REF
30	067758-099	HOSE GUARD - NYLON	REF
32	060861-136	3/8 HOSE ASSY X 136 6FJX-6FJX	1
33	060861-141	3/8 HOSE ASSY X 141 6FJX-6FJX	1
34	060861-102	3/8 HOSE ASSY X 529 6FJX-6FJX	1
35	060861-103	3/8 HOSE ASSY X 370 6FJX-6FJX	2

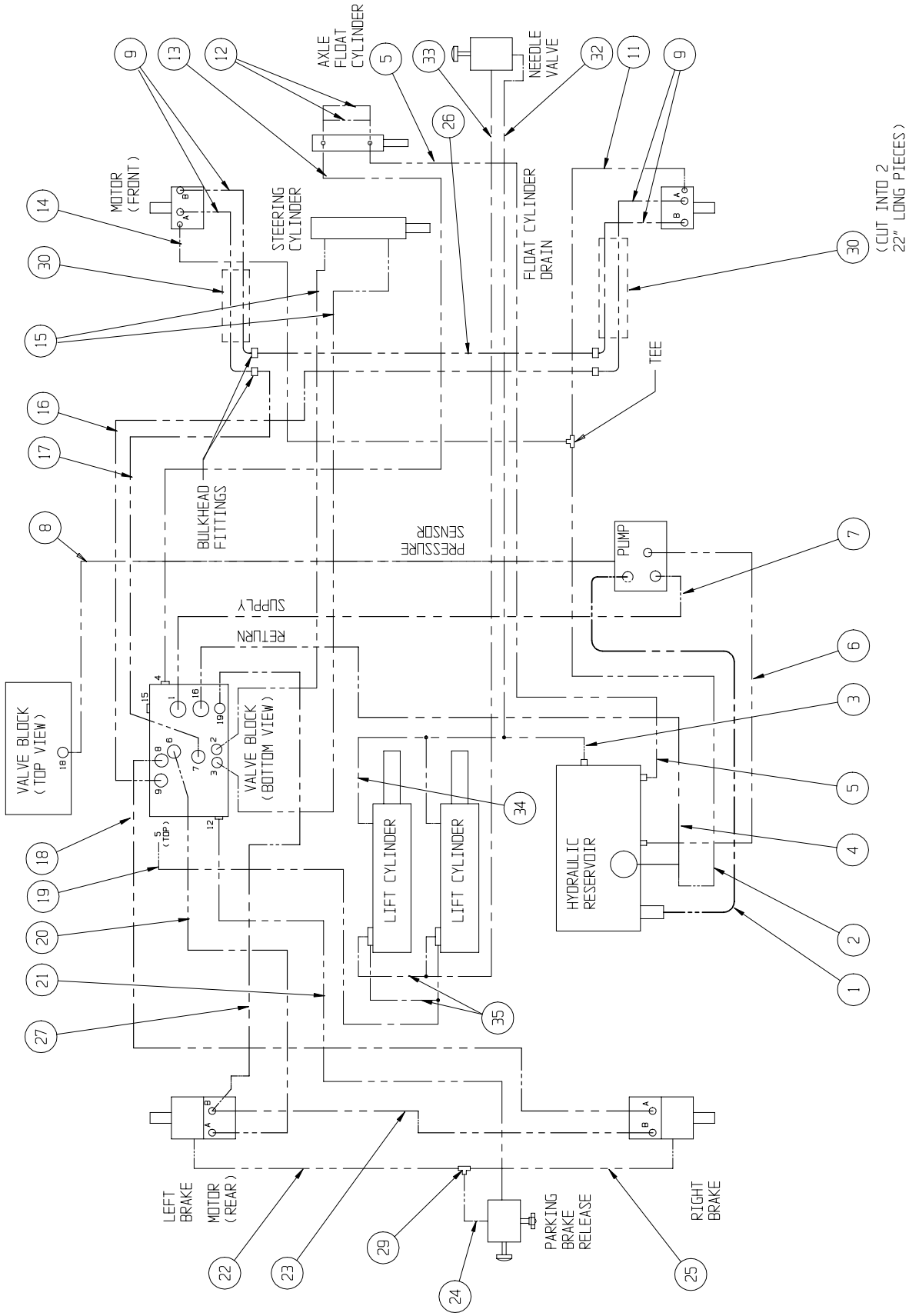
AXLE FLOAT CYLINDER
NEEDLE VALVE
MOTOR (FRONT)
STEERING CYLINDER
FLOAT CYLINDER DRAIN
(CUT INTO 2 22" LONG PIECES)
TEE
BULKHEAD FITTINGS
PRESSURE SENSOR
PUMP
SUPPLY
RETURN
VALVE BLOCK (TOP VIEW)
VALVE BLOCK (BOTTOM VIEW)
LIFT CYLINDER
LIFT CYLINDER
HYDRAULIC RESERVOIR
LEFT BRAKE
MOTOR (REAR)
PARKING BRAKE RELEASE
RIGHT BRAKE

HOSE KIT INSTALLATION, LX50 TWO-WHEEL DRIVE, W/OUTRIGGERS

067533-024

ITEM	PART NO.	DESCRIPTION	QTY.
1	067680-027	1-1/4 HOSE ASY X 27 20FJX-20FJX 90°	1
2	062192-033	1/4 HOSE ASSY X 80 6FJX-6FJX	2
3	067857-334	3/8 HOSE ASSY X 334 6FJX-6FJX90°	1
4	067676-131	3/4 HOSE ASSY X 131 12FJX-12FJX 90°	1
5	062192-034	1/4 HOSE ASSY X 118 6FJX-6FJX	2
6	067682-026	1/2 HOSE ASSY X 26 8FJX-8FJX 90°	1
7	067858-108	3/4 HOSE ASSY X 108 12FJX-12FJX	1
8	065234-096	1/4 HOSE ASSY X 96 4FJX-4FJX	1
9	062192-035	1/4 HOSE ASSY X 137 6FJX-6FJX	2
10	060861-136	3/8 HOSE ASSY X 136 6FJX-6FJX	1
11	067681-141	3/8 HOSE ASSY X 141 6FJX-6FJX	1
12	060861-102	3/8 HOSE ASSY X 529 6FJX-6FJX	1
13	060861-103	3/8 HOSE ASSY X 370 6FJX-6FJX	2
14	062192-036	1/4 HOSE ASSY X 176 6FJX-6FJX	2
15	067683-085	3/8 HOSE ASSY X 85 6FJX-6FJX 45°	2
16	062192-032	1/4 HOSE ASSY X 24 6FJX-6FJX	1
17	065234-005	1/4 HOSE ASSY X 26 4FJX-4FJX	1
18	067677-144	5/8 HOSE ASSY X 144 10FJX-10FX J90°	2
19	067684-200	3/8 HOSE ASSY X 200 6FJX-6FJX 90°	1
20	067677-112	5/8 HOSE ASSY X 112 10FJX-10FJX 90°	2
21	065234-152	1/4 HOSE ASSY X 152 4FJX-4FJX	1
22	065234-014	1/4 HOSE ASSY X 46.5 4FJX-4FJX	1
23	020032-001	FITTING 4MJ-4MJ TEE	REF
24	065234-032	1/4 HOSE ASSY X 32 4FJX-4FJX	1
25	065234-001	1/4 HOSE ASSY X 20 4FJX-4FJX	1
26	068740-030	1/2 HOSE ASSY X 30 10FJX-8FJX	1
27	020733-004	TEE FITTING 10FJX-10MJX-10MJX	1

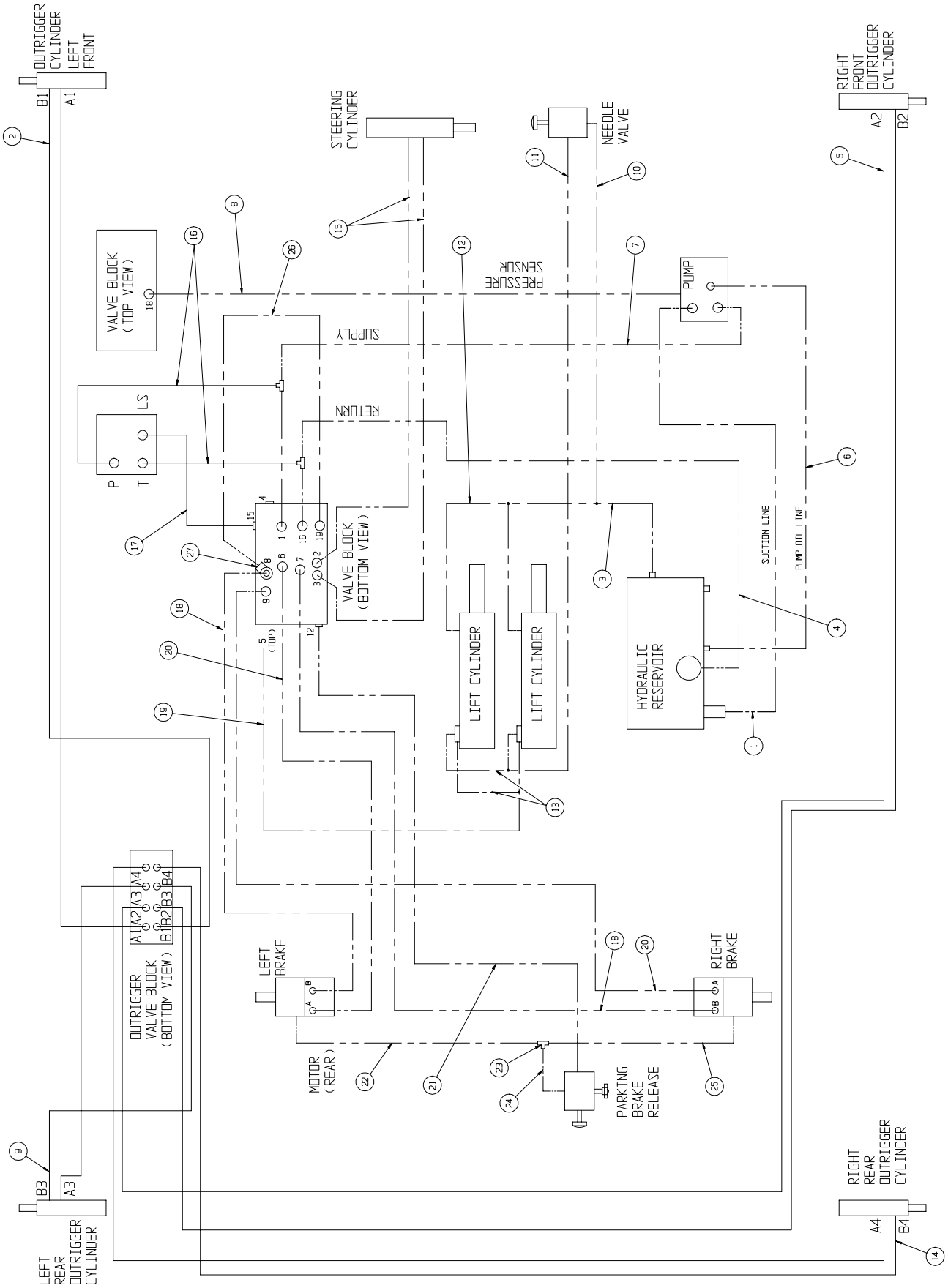
OUTRIGGER CYLINDER LEFT FRONT
B1
A1
STEERING CYLINDER
NEEDLE VALVE
RIGHT FRONT OUTRIGGER CYLINDER
A2
B2
VALVE BLOCK (TOP VIEW)
PRESSURE SENSOR
PUMP
SUPPLY
RETURN
LS
P
T
VALVE BLOCK (BOTTOM VIEW)
SUCTION LINE
PUMP OIL LINE
LIFT CYLINDER
LIFT CYLINDER
HYDRAULIC RESERVOIR
OUTRIGGER VALVE BLOCK (BOTTOM VIEW)
LEFT BRAKE
RIGHT BRAKE
MOTOR (REAR)
PARKING BRAKE RELEASE
B3
A3
LEFT REAR OUTRIGGER CYLINDER
RIGHT REAR OUTRIGGER CYLINDER
A4
B4

HOSE KIT INSTALLATION, LX50 FOUR-WHEEL DRIVE, W/OUTRIGGERS

067533-025

ITEM	PART NO.	DESCRIPTION	QTY.
1	067680-027	1-1/4 HOSE ASY X 27 20FJX-20FJX 90°	1
2	062192-009	1/4 HOSE ASSY X 65 4FJX-4FJX	1
3	067857-334	3/8 HOSE ASSY X 334 6FJX-6FJX90°	1
4	067676-131	3/4 HOSE ASSY X 131 12FJX-12FJX 90°	1
5	067681-120	1/4 HOSE ASSY X 120 4FJX-4FJX 90°	1
6	067682-026	1/2 HOSE ASSY X 26 8FJX-8FJX 90°	1
7	067858-108	3/4 HOSE ASSY X 108 12FJX-12FJX	1
8	065234-096	1/4 HOSE ASSY X 96 4FJX-4FJX	1
9	067679-044	1/2 HOSE ASSY X 44 10FJX-8FJX 45°	4
10	062192-033	1/4 HOSE ASSY X 80 6FJX-6FJX	2
11	067681-080	1/4 HOSE ASSY X 80 4FJX-4FJX 90°	1
12	067918-008	1/8 HOSE ASSY X 8 4FJX-4FJX	2
13	067681-100	1/4 HOSE ASSY X 100 4FJX-4FJX 90°	1
14	067681-115	1/4 HOSE ASSY X 115 4FJX-4FJX 90°	1
15	067683-085	3/8 HOSE ASSY X 85 6FJX-6FJX 45°	2
16	067677-090	5/8 HOSE ASSY X 90 10FJX-10FJX 90°	1
17	067677-060	5/8 HOSE ASSY X 60 10FJX-10FJX 90°	1
18	067677-144	5/8 HOSE ASSY X 144 10FJX-10FX J90°	1
19	067684-200	3/8 HOSE ASSY X 200 6FJX-6FJX 90°	1
20	067677-112	5/8 HOSE ASSY X 112 10FJX-10FJX 90°	1
21	065234-152	1/4 HOSE ASSY X 152 4FJX-4FJX	1
22	065234-014	1/4 HOSE ASSY X 46.5 4FJX-4FJX	1
23	067687-061	5/8 HOSE ASSY X 61 10FJX90-10FJX90	1
24	065234-032	1/4 HOSE ASSY X 32 4FJX-4FJX	1

ITEM	PART NO.	DESCRIPTION	QTY.
25	065234-001	1/4 HOSE ASSY X 20 4FJX-4FJX	1
26	067687-100	5/8 HOSE ASSY X 100 10FJX90-10FJX90	1
27	068740-120	1/2 HOSE ASSY X 120 10FJX-8FJX	1
28	062192-034	1/4 HOSE ASSY X 118 6FJX-6FJX	2
29	020032-001	FITTING 4MJ-4MJ TEE	REF
30	067758-099	HOSE GUARD - NYLON	REF
31	062192-035	1/4 HOSE ASSY X 137 6FJX-6FJX	2
32	060861-136	3/8 HOSE ASSY X 136 6FJX-6FJX	1
33	060861-141	3/8 HOSE ASSY X 141 6FJX-6FJX	1
34	060861-102	3/8 HOSE ASSY X 529 6FJX-6FJX	1
35	060861-103	3/8 HOSE ASSY X 370 6FJX-6FJX	2
36	062192-036	1/4 HOSE ASSY X 176 6FJX-6FJX	2
37	062192-032	1/4 HOSE ASSY X 24 6FJX-6FJX	1
38	065234-005	1/4 HOSE ASSY X 26 4FJX-4FJX	1

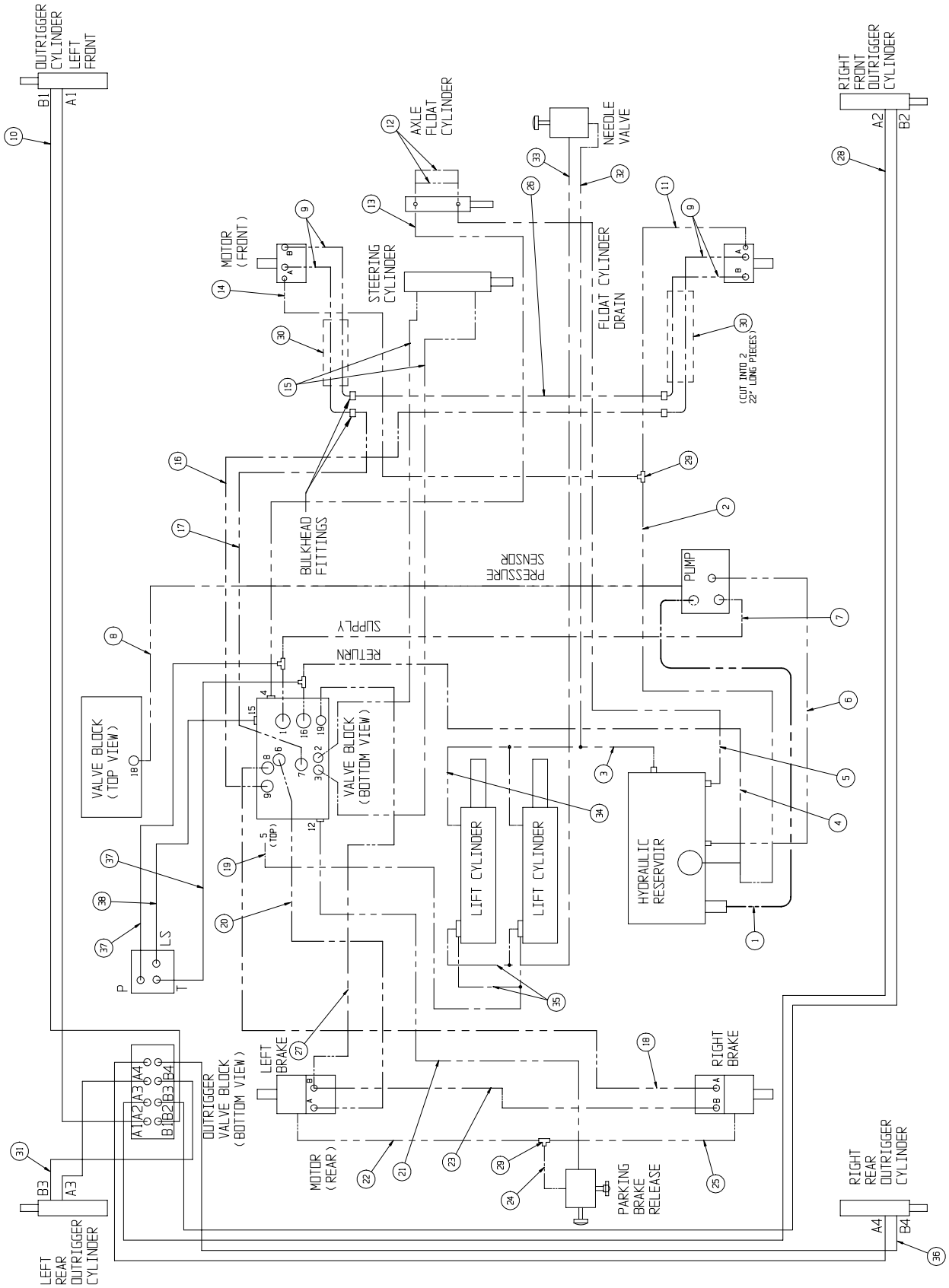
OUTRIGGER CYLINDER LEFT FRONT
B1
A1
AXLE FLOAT CYLINDER
NEEDLE VALVE
RIGHT FRONT OUTRIGGER CYLINDER
A2
B2
MOTOR (FRONT)
STEERING CYLINDER
FLOAT CYLINDER DRAIN
(CUT INTO 2 22" LONG PIECES)
BULKHEAD FITTINGS
PRESSURE SENSOR
PUMP
SUPPLY
RETURN
VALVE BLOCK (TOP VIEW)
VALVE BLOCK (BOTTOM VIEW)
LIFT CYLINDER
LIFT CYLINDER
HYDRAULIC RESERVOIR
LS
P
T
LEFT BRAKE
RIGHT BRAKE
OUTRIGGER VALVE BLOCK (BOTTOM VIEW)
A1 A2 A3 A4
B1 B2 B3 B4
MOTOR (REAR)
PARKING BRAKE RELEASE
B3
A3
LEFT REAR OUTRIGGER CYLINDER
RIGHT REAR OUTRIGGER CYLINDER
A4
B4

LABEL KIT INSTALLATION, LX50 2-WHEEL DRIVE DUAL FUEL, STAND. DECK

067532-180

ITEM	PART NO.	DESCRIPTION	QTY.
1	010076-000	MANUAL CASE	1
2	010076-001	LABEL-ATTENTION	1
3	067903-003	USER MANUAL LX-SERIES	1
4	060197-000	LABEL-HYD. FLUID	1
5	061205-005	NAME PLATE	1
6	061220-002	LABEL-ANSI	1
7	060577-004	ANSI MANUAL	1
8	064166-000	LABEL-UNLEADED FUEL	1
9	066552-000	LABEL-WARNING BATTERY	1
10	064189-001	LABEL-LIQUID WITHDRAWL	1
11	067642-003	LABEL-CONTROLLER	1
12	067481-000	LABEL-LOWER CONTROLS, GAS	1
13	067480-000	LABEL-LED CODES	1
14	066550-009	LABEL-DANGER	1
15	067478-000	LABEL-NOTICE	2
16	066551-003	LABEL-CAUTION	1
17	030624-024	LABEL-CHOKE	1
18	064444-000	LABEL-USA	3
19	066554-000	LABEL-READ	1
21	063423-000	LABEL-BRAKE RELEASE	1
23	061515-000	LABEL-LIFT HERE	1
24	066568-000	LABEL-WARNING	1
26	101250-003	LABEL-MAX LOAD 1000 LB.	2
27	066562-003	LABEL-POLY FILLED TIRES	1
28	061683-005	LABEL-UPRIGHT 4 1/2	3
29	061683-007	LABEL-UPRIGHT 5 1/2	4
30	067644-014	LABEL-LX50 2WD	3
31	067644-013	LABEL-LX50 2WD	4
33	011248-004	NUT HEX ESNA 1/4-20UNC	4
35	011252-008	SCREW HHC 1/4-20UNC X 1	4
36	065368-000	TACK	4
37	060830-000	SAFETY WALK	4
38	066561-001	LABEL, MAINT. BRACE	1
39	060086-000	SAFETY WALK 20 X 32	12
40	066558-000	LABEL, EMERG. LOWERING	2
42	101252-015	MAX WHEEL LOAD	1

LABEL KIT INSTALLATION, LX50 2-WHEEL DRIVE DIESEL, STAND. DECK

067532-181

ITEM	PART NO.	DESCRIPTION	QTY.
1	010076-000	MANUAL CASE	1
2	010076-001	LABEL-ATTENTION	1
3	067903-003	USER MANUAL LX-SERIES	1
4	060197-000	LABEL-HYD. FLUID	1
5	061205-005	NAME PLATE	1
6	061220-002	LABEL-ANSI	1
7	060577-004	ANSI MANUAL	1
9	066552-000	LABEL-WARNING BATTERY	1
11	067642-003	LABEL-CONTROLLER	1
12	067481-001	LABEL-LOWER CONTROLS, DIESEL	1
13	067480-000	LABEL-LED CODES	1
14	066550-009	LABEL-DANGER	1
15	067478-000	LABEL-NOTICE	2
16	066551-003	LABEL-CAUTION	1
17	067822-000	LABEL-GLOW PLUG	1
18	064444-000	LABEL-USA	3
19	066554-000	LABEL-READ	1
21	063423-000	LABEL-BRAKE RELEASE	1
23	061515-000	LABEL-LIFT HERE	1
24	066568-000	LABEL-WARNING	1
25	027898-000	LABEL-DIESEL FUEL	1
26	101250-003	LABEL-MAX LOAD 1000 LB.	2
27	066562-003	LABEL-POLY FILLED TIRES	1
28	061683-005	LABEL-UPRIGHT 4 1/2	3
29	061683-007	LABEL-UPRIGHT 5 1/2	4
30	067644-014	LABEL-LX50 2WD	3
31	067644-013	LABEL-LX50 2WD	4
33	011248-004	NUT HEX ESNA 1/4-20UNC	4
34	067822-001	LABEL ATTENTION GLOW PLUGS	2
35	011252-008	SCREW HHC 1/4-20UNC X 1	4
36	065368-000	TACK	4
37	060830-000	SAFETY WALK	4
38	066561-001	LABEL, MAINT. BRACE	1
39	060086-000	SAFETY WALK 20 X 32	12
40	066558-000	LABEL, EMERG. LOWERING	2
42	101252-015	MAX WHEEL LOAD	1

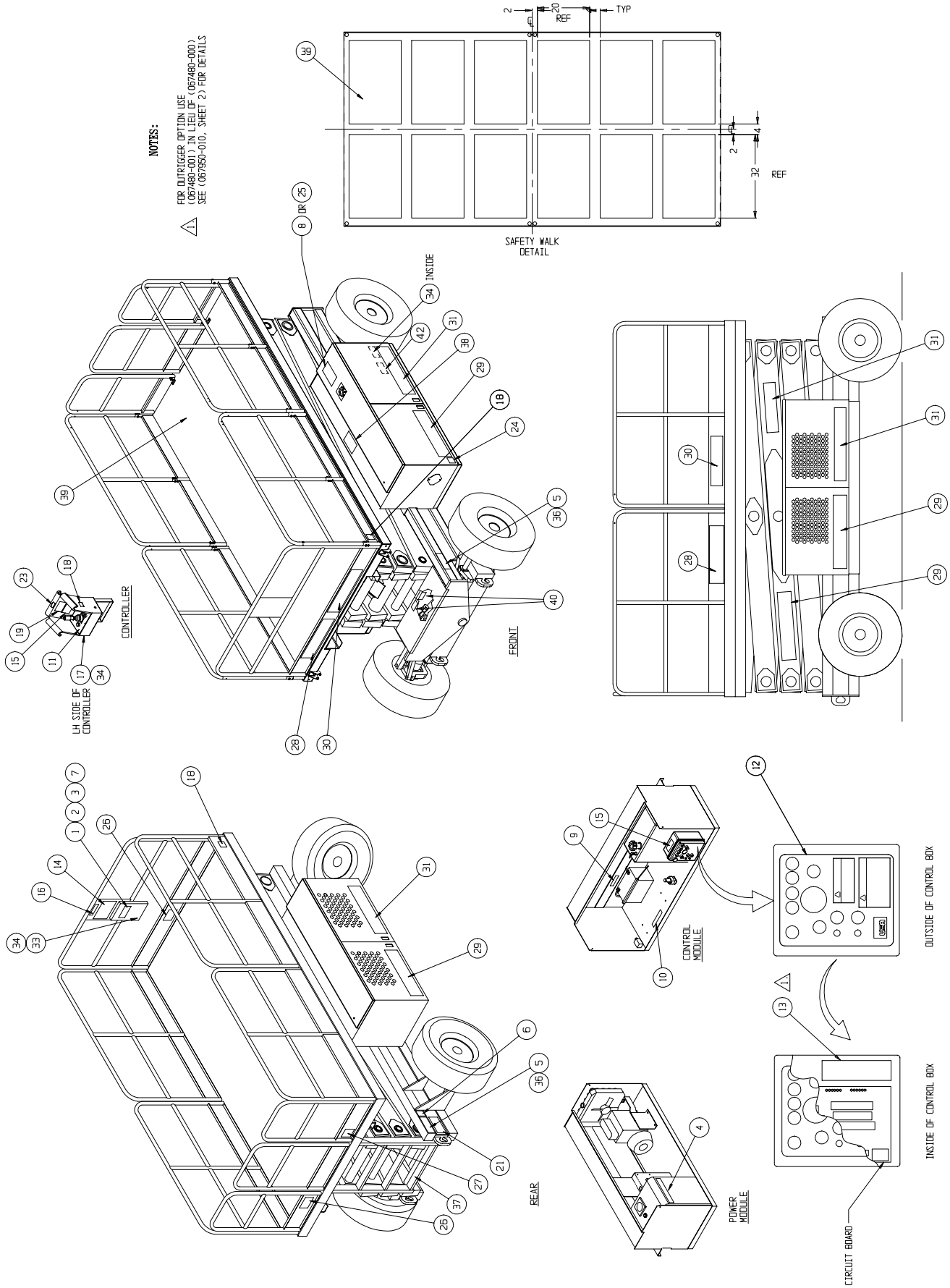
NOTES:
1. FOR OUTRIGGER OPTION USE (067480-001) IN LIEU OF (067480-000) SEE (067950-010, SHEET 2) FOR DETAILS
SAFETY WALK DETAIL
TYP
REF
CONTROLLER
LH SIDE OF CONTROLLER
FRONT
REAR
CONTROL MODULE
POWER MODULE
OUTSIDE OF CONTROL BOX
INSIDE OF CONTROL BOX
CIRCUIT BOARD

LABEL KIT INSTALLATION, LX50 4-WHEEL DRIVE DUAL FUEL, STAND. DECK

067532-182

ITEM	PART NO.	DESCRIPTION	QTY.
1	010076-000	MANUAL CASE	1
2	010076-001	LABEL-ATTENTION	1
3	067903-003	USER MANUAL LX-SERIES	1
4	060197-000	LABEL-HYD. FLUID	1
5	061205-005	NAME PLATE	1
6	061220-002	LABEL-ANSI	1
7	060577-004	ANSI MANUAL	1
8	064166-000	LABEL-UNLEADED FUEL	1
9	066552-000	LABEL-WARNING BATTERY	1
10	064189-001	LABEL-LIQUID WITHDRAWL	1
11	067642-003	LABEL-CONTROLLER	1
12	067481-000	LABEL-LOWER CONTROLS, GAS	1
13	067480-000	LABEL-LED CODES	1
14	066550-009	LABEL-DANGER	1
15	067478-000	LABEL-NOTICE	2
16	066551-003	LABEL-CAUTION	1
17	030624-024	LABEL-CHOKE	1
18	064444-000	LABEL-USA	3
19	066554-000	LABEL-READ	1
21	063423-000	LABEL-BRAKE RELEASE	1
23	061515-000	LABEL-LIFT HERE	1
24	066568-000	LABEL-WARNING	1
26	101250-003	LABEL-MAX LOAD 1000 LB.	2
27	066562-003	LABEL-POLY FILLED TIRES	1
28	061683-005	LABEL-UPRIGHT 4 1/2	3
29	061683-007	LABEL-UPRIGHT 5 1/2	4
30	067644-016	LABEL-LX50 4WD	3
31	067644-015	LABEL LX50 4WD	4
33	011248-004	NUT HEX ESNA 1/4-20UNC	4
35	011252-008	SCREW HHC 1/4-20UNC X 1	4
36	065368-000	TACK	4
37	060830-000	SAFETY WALK	4
38	066561-001	LABEL, MAINT. BRACE	1
39	060086-000	SAFETY WALK 20 X 32	12
40	066558-000	LABEL, EMERG. LOWERING	2
42	101252-015	MAX WHEEL LOAD	1

LABEL KIT INSTALLATION, LX50 4-WHEEL DRIVE DIESEL, STAND. DECK

067532-183

ITEM	PART NO.	DESCRIPTION	QTY.
1	010076-000	MANUAL CASE	1
2	010076-001	LABEL-ATTENTION	1
3	067903-003	USER MANUAL LX-SERIES	1
4	060197-000	LABEL-HYD. FLUID	1
5	061205-005	NAME PLATE	1
6	061220-002	LABEL-ANSI	1
7	060577-004	ANSI MANUAL	1
9	066552-000	LABEL-WARNING BATTERY	1
11	067642-003	LABEL-CONTROLLER	1
12	067481-001	LABEL-LOWER CONTROLS, DIESEL	1
13	067480-000	LABEL-LED CODES	1
14	066550-009	LABEL-DANGER	1
15	067478-000	LABEL-NOTICE	2
16	066551-003	LABEL-CAUTION	1
17	067822-000	LABEL-GLOW PLUG	1
18	064444-000	LABEL-USA	3
19	066554-000	LABEL-READ	1
21	063423-000	LABEL-BRAKE RELEASE	1
23	061515-000	LABEL-LIFT HERE	1
24	066568-000	LABEL-WARNING	1
25	027898-000	LABEL-DIESEL FUEL	1
26	101250-003	LABEL-MAX LOAD 1000 LB.	2
27	066562-003	LABEL-POLY FILLED TIRES	1
28	061683-005	LABEL-UPRIGHT 4 1/2	3
29	061683-007	LABEL-UPRIGHT 5 1/2	4
30	067644-016	LABEL-LX50 4WD	3
31	067644-015	LABEL LX50 4WD	4
33	011248-004	NUT HEX ESNA 1/4-20UNC	4
34	067822-001	LABEL ATTENTION GLOW PLUGS	2
35	011252-008	SCREW HHC 1/4-20UNC X 1	4
36	065368-000	TACK	4
37	060830-000	SAFETY WALK	4
38	066561-001	LABEL, MAINT. BRACE	1
39	060086-000	SAFETY WALK 20 X 32	12
40	066558-000	LABEL, EMERG. LOWERING	2
42	101252-015	MAX WHEEL LOAD	1

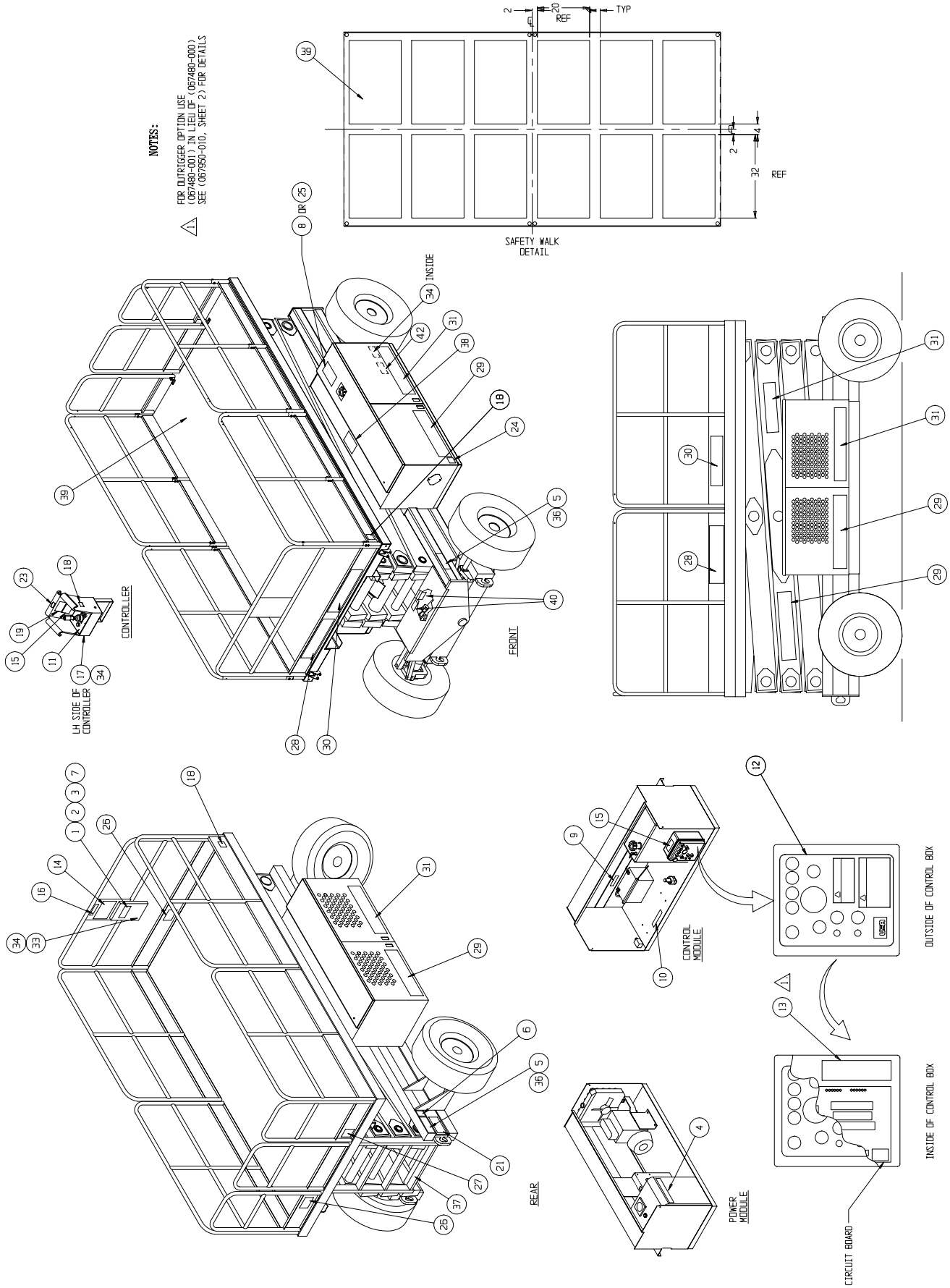
NOTES:
1 FOR OUTRIGGER OPTION USE (067480-001) IN LIEU OF (067480-000) SEE (067950-010, SHEET 2) FOR DETAILS
SAFETY WALK DETAIL
TYP
REF
CONTROLLER
LH SIDE OF CONTROLLER
FRONT
REAR
CONTROL MODULE
POWER MODULE
OUTSIDE OF CONTROL BOX
INSIDE OF CONTROL BOX
CIRCUIT BOARD

LABEL KIT INSTALLATION, LX50 2-WHEEL DRIVE DUAL FUEL, DUAL DECK

067532-168

ITEM	PART NO.	DESCRIPTION	QTY.
1	010076-000	MANUAL CASE	1
2	010076-001	LABEL-ATTENTION	1
3	067903-003	USER MANUAL LX-SERIES	1
4	060197-000	LABEL-HYD. FLUID	1
5	061205-005	NAME PLATE	1
6	061220-002	LABEL-ANSI	1
7	060577-004	ANSI MANUAL	1
8	064166-000	LABEL-UNLEADED FUEL	1
9	066552-000	LABEL-WARNING BATTERY	1
10	064189-001	LABEL-LIQUID WITHDRAWL	1
11	067642-004	LABEL-CONTROLLER	1
12	067481-000	LABEL-LOWER CONTROLS, DUAL FUEL	1
13	067480-001	LABEL-LED CODES	1
14	066550-009	LABEL-DANGER	1
15	067478-000	LABEL-NOTICE	2
16	066551-003	LABEL-DANGER TIPPING	1
17	030624-024	LABEL-CHOKE	1
18	066556-001	LABEL-CAUTION	4
19	066554-000	LABEL-READ	1
20	064444-000	LABEL-USA	3
21	063423-000	LABEL-BRAKE RELEASE	1
22	066562-003	LABEL-POLY FILLED TIRES	1
23	061515-000	LABEL-LIFT HERE	1
24	066568-000	LABEL-WARNING	1
26	101250-012	LABEL-MAX LOAD 750 LB.	2
27	061683-004	LABEL-UPRIGHT 2-1/2	1
28	061683-005	LABEL-UPRIGHT 4 1/2	2
29	061683-007	LABEL-UPRIGHT 5 1/2	3
30	067644-019	LABEL-LX50 2WD	5
31	067644-013	LABEL-LX50 2WD	1
33	011248-004	NUT HEX ESNA 1/4-20UNC	4
35	011252-008	SCREW HHC 1/4-20UNC X 1	4
36	065368-000	TACK	4
37	060830-001	SAFETY WALK 4 X 20	4
38	066561-001	LABEL, MAINT. BRACE	1
39	060086-000	SAFETY WALK 20 X 32	12
40	066558-000	LABEL, EMERG. LOWERING	2
42	101252-015	MAX WHEEL LOAD	1

LABEL KIT INSTALLATION, LX50 2-WHEEL DRIVE DIESEL, DUAL DECK

067532-169

ITEM	PART NO.	DESCRIPTION	QTY.
1	010076-000	MANUAL CASE	1
2	010076-001	LABEL-ATTENTION	1
3	067903-003	USER MANUAL LX-SERIES	1
4	060197-000	LABEL-HYD. FLUID	1
5	061205-005	NAME PLATE	1
6	061220-002	LABEL-ANSI	1
7	060577-004	ANSI MANUAL	1
9	066552-000	LABEL-WARNING BATTERY	1
11	067642-004	LABEL-CONTROLLER	1
12	067481-001	LABEL-LOWER CONTROLS, DIESEL	1
13	067480-001	LABEL-LED CODES	1
14	066550-009	LABEL-DANGER	1
15	067478-000	LABEL-NOTICE	2
16	066551-003	LABEL-DANGER TIPPING	1
17	067822-000	LABEL-GLOW PLUG	1
18	066556-001	LABEL-CAUTION	4
19	066554-000	LABEL-READ	1
20	064444-000	LABEL-USA	3
21	063423-000	LABEL-BRAKE RELEASE	1
22	066562-003	LABEL-POLY FILLED TIRES	1
23	061515-000	LABEL-LIFT HERE	1
24	066568-000	LABEL-WARNING	1
25	027898-000	LABEL-DIESEL FUEL	1
26	101250-012	LABEL-MAX LOAD 750 LB.	2
27	061683-004	LABEL-UPRIGHT 2-1/2	1
28	061683-005	LABEL-UPRIGHT 4 1/2	2
29	061683-007	LABEL-UPRIGHT 5 1/2	3
30	067644-019	LABEL-LX50 2WD	5
31	067644-013	LABEL-LX50 2WD	1
33	011248-004	NUT HEX ESNA 1/4-20UNC	4
34	067822-001	LABEL ATTENTION GLOW PLUGS	2
35	011252-008	SCREW HHC 1/4-20UNC X 1	4
36	065368-000	TACK	4
37	060830-001	SAFETY WALK 4 X 20	4
38	066561-001	LABEL, MAINT. BRACE	1
39	060086-000	SAFETY WALK 20 X 32	12
40	066558-000	LABEL, EMERG. LOWERING	2
42	101252-015	MAX WHEEL LOAD	1

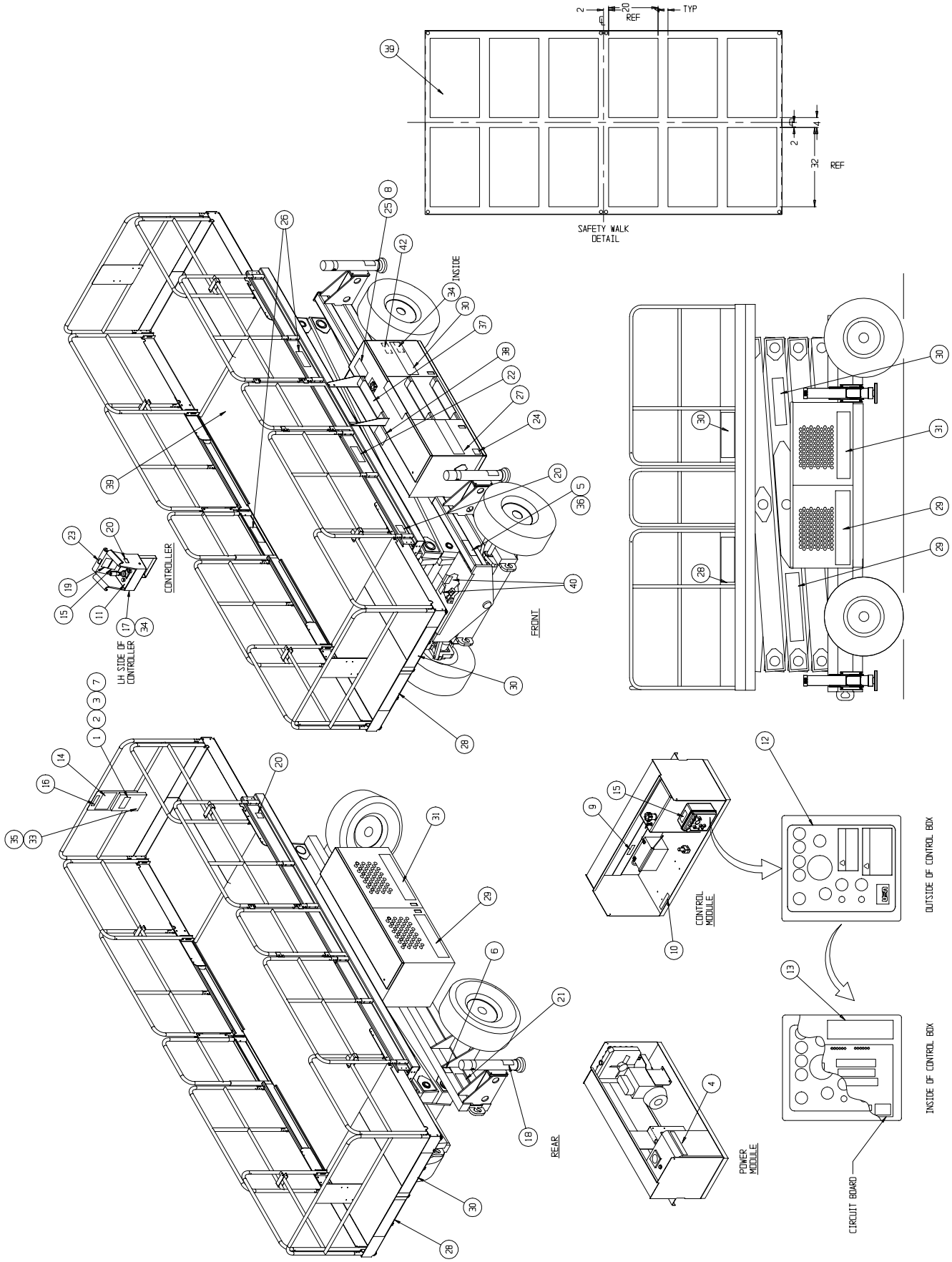
SAFETY WALK DETAIL
REF
TYP
REF
INSIDE
FRONT
CONTROLLER
LH SIDE OF CONTROLLER
REAR
CONTROL MODULE
POWER MODULE
OUTSIDE OF CONTROL BOX
INSIDE OF CONTROL BOX
CIRCUIT BOARD

LABEL KIT INSTALLATION, LX50 4-WHEEL DRIVE DUAL FUEL, DUAL DECK

067532-170

ITEM	PART NO.	DESCRIPTION	QTY.
1	010076-000	MANUAL CASE	1
2	010076-001	LABEL-ATTENTION	1
3	067903-003	USER MANUAL LX-SERIES	1
4	060197-000	LABEL-HYD. FLUID	1
5	061205-005	NAME PLATE	1
6	061220-002	LABEL-ANSI	1
7	060577-004	ANSI MANUAL	1
8	064166-000	LABEL-UNLEADED FUEL	1
9	066552-000	LABEL-WARNING BATTERY	1
10	064189-001	LABEL-LIQUID WITHDRAWL	1
11	067642-004	LABEL-CONTROLLER	1
12	067481-000	LABEL-LOWER CONTROLS, DUAL FUEL	1
13	067480-001	LABEL-LED CODES	1
14	066550-009	LABEL-DANGER	1
15	067478-000	LABEL-NOTICE	2
16	066551-003	LABEL-DANGER TIPPING	1
17	030624-024	LABEL-CHOKE	1
18	066556-001	LABEL-CAUTION	4
19	066554-000	LABEL-READ	1
20	064444-000	LABEL-USA	3
21	063423-000	LABEL-BRAKE RELEASE	1
22	066562-003	LABEL-POLY FILLED TIRES	1
23	061515-000	LABEL-LIFT HERE	1
24	066568-000	LABEL-WARNING	1
26	101250-012	LABEL-MAX LOAD 750 LB.	2
27	061683-004	LABEL-UPRIGHT 2-1/2	1
28	061683-005	LABEL-UPRIGHT 4 1/2	2
29	061683-007	LABEL-UPRIGHT 5 1/2	3
30	067644-020	LABEL-LX50 4WD	5
31	067644-015	LABEL LX50 4WD	1
33	011248-004	NUT HEX ESNA 1/4-20UNC	4
35	011252-008	SCREW HHC 1/4-20UNC X 1	4
36	065368-000	TACK	4
37	060830-001	SAFETY WALK 4 X 20	4
38	066561-001	LABEL, MAINT. BRACE	1
39	060086-000	SAFETY WALK 20 X 32	12
40	066558-000	LABEL, EMERG. LOWERING	2
42	101252-015	MAX WHEEL LOAD	1

LABEL KIT INSTALLATION, LX50 FOUR-WHEEL DRIVE DIESEL, DUAL DECK

067532-171

ITEM	PART NO.	DESCRIPTION	QTY.
1	010076-000	MANUAL CASE	1
2	010076-001	LABEL-ATTENTION	1
3	067903-003	USER MANUAL LX-SERIES	1
4	060197-000	LABEL-HYD. FLUID	1
5	061205-005	NAME PLATE	1
6	061220-002	LABEL-ANSI	1
7	060577-004	ANSI MANUAL	1
9	066552-000	LABEL-WARNING BATTERY	1
11	067642-004	LABEL-CONTROLLER	1
12	067481-001	LABEL-LOWER CONTROLS, DIESEL	1
13	067480-001	LABEL-LED CODES	1
14	066550-009	LABEL-DANGER	1
15	067478-000	LABEL-NOTICE	2
16	066551-003	LABEL-DANGER TIPPING	1
17	067822-000	LABEL-GLOW PLUG	1
18	066556-001	LABEL-CAUTION	4
19	066554-000	LABEL-READ	1
20	064444-000	LABEL-USA	3
21	063423-000	LABEL-BRAKE RELEASE	1
22	066562-003	LABEL-POLY FILLED TIRES	1
23	061515-000	LABEL-LIFT HERE	1
24	066568-000	LABEL-WARNING	1
25	027898-000	LABEL-DIESEL FUEL	1
26	101250-012	LABEL-MAX LOAD 750 LB.	2
27	061683-004	LABEL-UPRIGHT 2-1/2	1
28	061683-005	LABEL-UPRIGHT 4 1/2	2
29	061683-007	LABEL-UPRIGHT 5 1/2	3
30	067644-020	LABEL-LX50 4WD	5
31	067644-015	LABEL LX50 4WD	1
33	011248-004	NUT HEX ESNA 1/4-20UNC	4
34	067822-001	LABEL ATTENTION GLOW PLUGS	2
35	011252-008	SCREW HHC 1/4-20UNC X 1	4
36	065368-000	TACK	4
37	060830-001	SAFETY WALK 4 X 20	4
38	066561-001	LABEL, MAINT. BRACE	1
39	060086-000	SAFETY WALK 20 X 32	12
40	066558-000	LABEL, EMERG. LOWERING	2
42	101252-015	MAX WHEEL LOAD	1

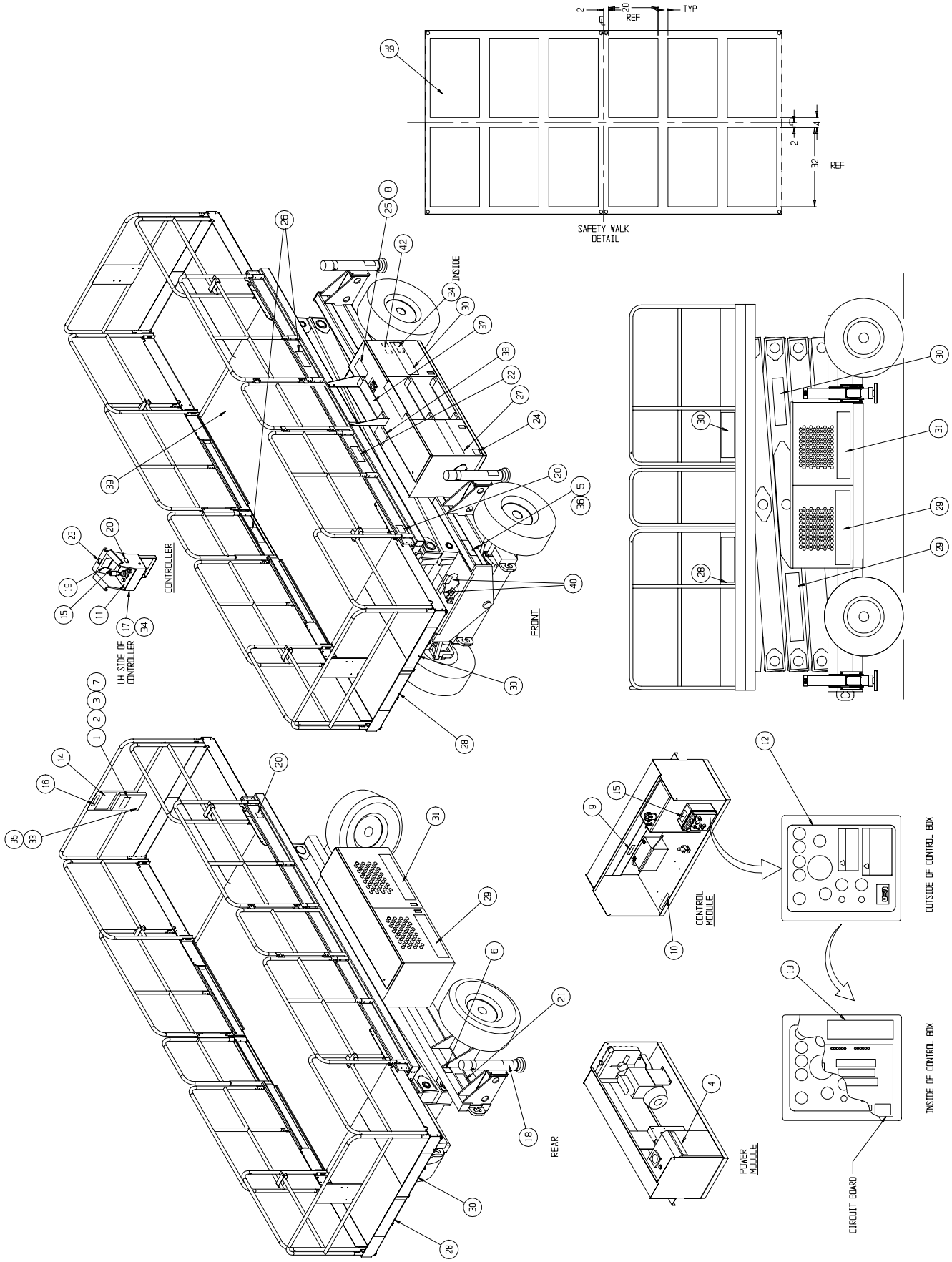
SAFETY WALK DETAIL
REF
TYP
REF
INSIDE
FRONT
CONTROLLER
LH SIDE OF CONTROLLER
REAR
CONTROL MODULE
POWER MODULE
OUTSIDE OF CONTROL BOX
INSIDE OF CONTROL BOX
CIRCUIT BOARD

GUARDRAIL INSTALLATION, LX50
STANDARD DECK
067530-005

ITEM	PART NO.	DESCRIPTION	QTY.
1	REF	PLATFORM WELDMENT	1
2	067751-002	SIDE GUARDRAIL WELDMENT	3
3	067751-001	GUARDRAIL WELDMENT R.H.	1
4	067883-000	GATE WELDMENT	1
5	003570-000	RETAINING PIN ASSY	1
6	062642-026	BEARING	2
7	066526-002	TORSION SPRING	1
8	067764-001	GATE KICKRAIL WELDMENT	1
9	011254-008	SCREW HHC 3/8-16UNC X 1	7
10	011254-032	SCREW HHC 3/8-16UNC X 4	8
11	064046-000	BRACKET, RAIL MOUNTING	6
12	011248-006	NUT HEX ESNA 3/8-16UNC	31
13	011254-018	SCREW HHC 3/8-16UNC X 2 1/4	4
14	011254-036	SCREW HHC 3/8-16UNC X 4-1/2	2
15	067881-000	END GUARDRAIL WELDMENT	1
16	067880-001	END GUARDRAIL WELDMENT	1
17	011254-014	SCREW HHC 3/8-16UNC X 1 3/4	8
18	067757-000	KICKRAIL WELDMENT	2
19	011254-020	SCR HHC 3/8-16 X 2-1/2	2
20	0067712-000	PIVOT TUBE WELDMENT	1
21	067695-000	SPACER	6
22	011739-014	ROLLPIN 3/8D X 1 3/4	1
23	011240-006	WASHER, FLAT STD 3/8	4
24	063666-004	WIRE CHANNEL	1
25	011253-012	SCREW HHC 5/16-18 X 1 1/2	2
26	011240-005	WASHER 5/16 FLAT	2
27	011250-005	NUT 5/16-18 HEX	2
28	067885-000	END RAIL WELDMENT	1

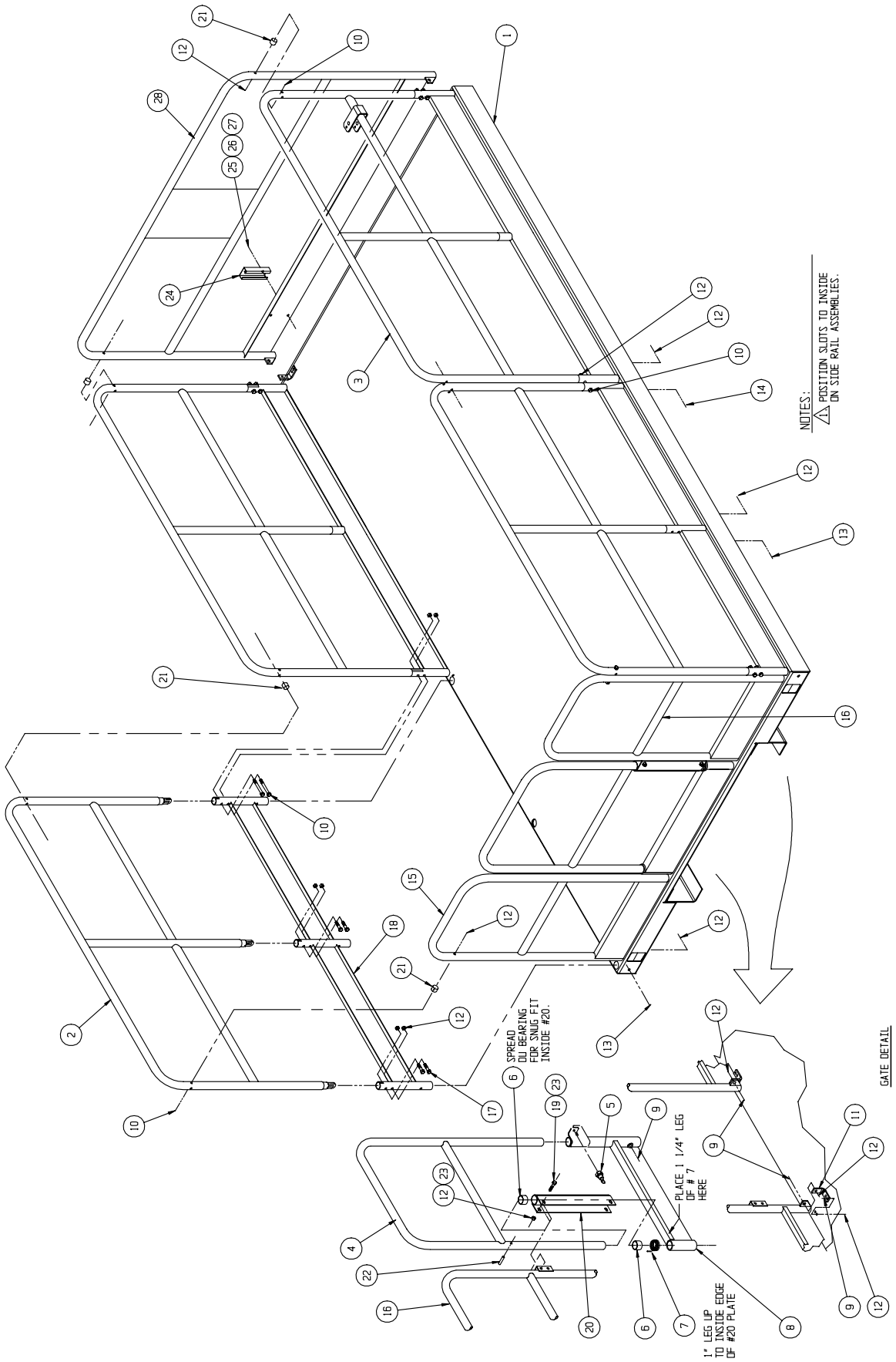
NOTES:
1. POSITION SLOTS TO INSIDE ON SIDE RAIL ASSEMBLIES.
SPREAD DU BEARING FOR SNUG FIT INSIDE #20.
PLACE 1 1/4" LEG OF # 7 HERE
1" LEG UP TO INSIDE EDGE OF #20 PLATE
GATE DETAIL

GUARDRAIL INSTALLATION, LX50
DUAL DECK
030841-300

ITEM	PART NO.	DESCRIPTION	QTY.
1	030841-101	PLATFORM WELDMENT	REF
2	030841-018	GUARDRAIL WELDMENT	1
3	030841-019	GUARDRAIL WELDMENT	1
4	067883-000	GATE WELDMENT	1
5	003570-000	RETAINING PIN ASSY	1
6	062642-026	BEARING	2
7	066526-002	TORSION SPRING	1
8	067764-001	GATE KICKRAIL WELDMENT	1
9	011254-008	SCREW HHC 3/8-16UNC X 1	6
10	030841-020	GUARDRAIL WELDMENT 3	1
11	030841-021	GUARDRAIL WELDMENT 4	1
12	011248-006	NUT HEX ESNA 3/8-16UNC	60
13	011254-018	SCREW HHC 3/8-16UNC X 2 1/4	28
14	030841-050	STEP WELDMENT	1
15	030841-054	CENTER GUARDRAIL WELDMENT	1
16	067755-001	SWING TUBE	12
17	011254-014	SCREW HHC 3/8-16UNC X 1 3/4	24
19	011254-20	SCR HHC 3/8-16 X 2-1/2	2
20	030841-013	PIVOT TUBE WELDMENT	1
21	067695-000	SPACER	6
22	011739-014	ROLLPIN 3/8D X 1 3/4	1
23	011240-006	WASHER, FLAT STD 3/8	8

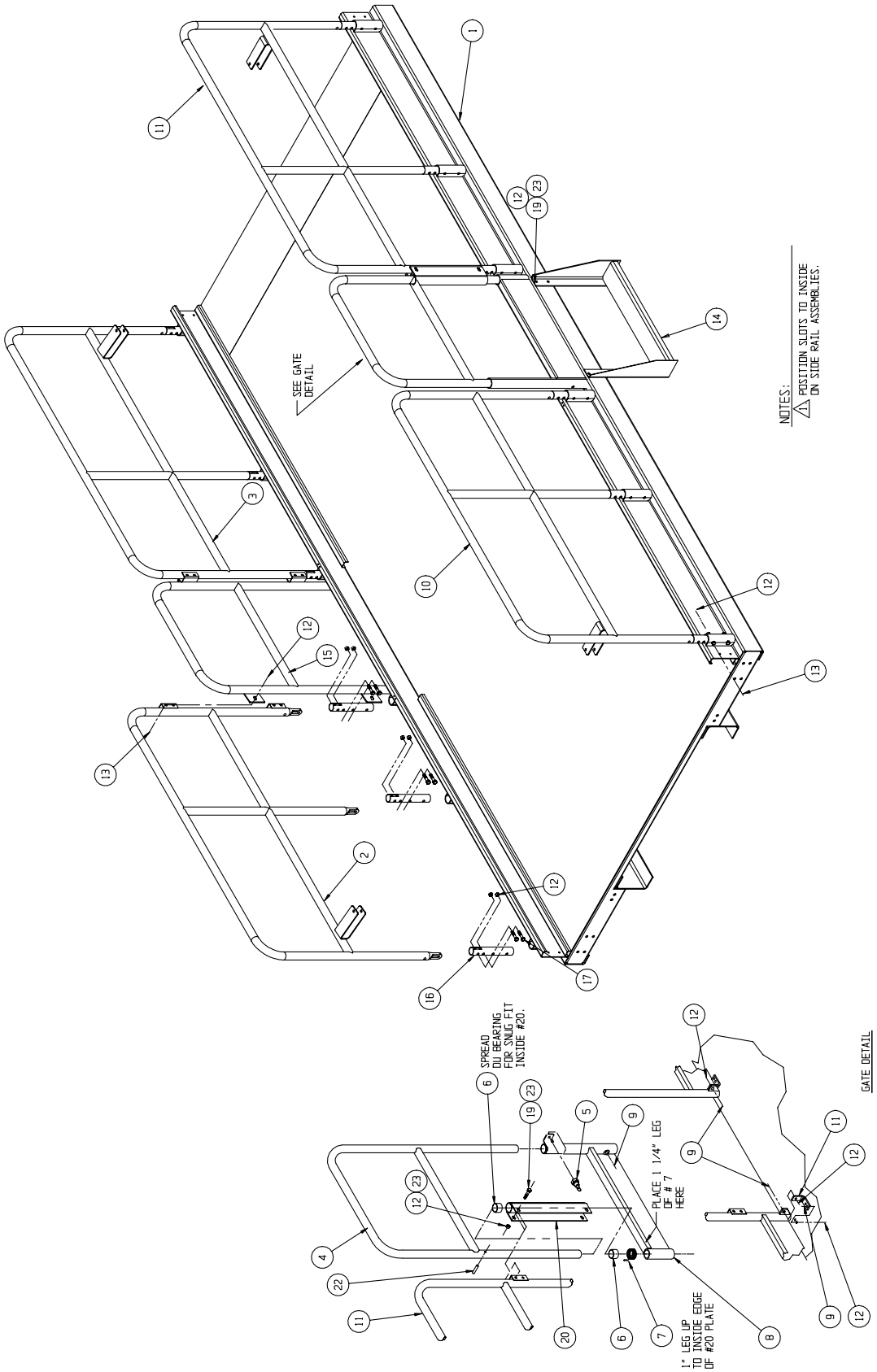
SEE GATE DETAIL
NOTES:
1. POSITION SLOTS TO INSIDE ON SIDE RAIL ASSEMBLIES.
SPREAD DU BEARING FOR SNUG FIT INSIDE #20.
PLACE 1 1/4" LEG OF #7 HERE
1" LEG UP TO INSIDE EDGE OF #20 PLATE
GATE DETAIL

VALVE MANIFOLD ASSEMBLY, LX50 TWO-WHEEL DRIVE

067489-000

ITEM	PART NO.	DESCRIPTION	QTY.
1	067489-001	VALVE BLOCK	1
2	067489-002	VALVE, BI-DIRECTIONAL RELIEF	1
3	067489-003	VALVE, 3 POS - 4 WAY	1
6	067489-006	VALVE, PROPORTIONAL	1
7	067489-007	VALVE, RELIEF	1
8	067489-008	VALVE, SOL. 2 POS 3 WAY	5
9	067489-009	VALVE, COUNTERBALANCE	2
10	067489-010	ORIFICE (.060 DIA.)	1
11	067489-011	VALVE, SHUTTLE	4
12	067489-012	VALVE, FLOW DIVDER/COMBINER	1
14	011941-005	ADAPTER, #6 MB - #6 MJ	3
15	011941-009	ADAPTER, #8 MB - #6 MJ	1
16	011941-015	ADAPTER, #10 MB - #10 MJ	4
17	011941-020	ADAPTER, #12 MB - #12 MJ	1
18	011934-003	ADAPTER, 90° #6 MB - #4 MJ	2
19	063965-001	PLUG, GUAGE PORT	3
20	020021-004	PLUG, #4 MB	2
21	063955-010	PLUG, CAVITY #8 2 WAY	1
22	063955-009	PLUG, CAVITY #8 - 3 WAY	1
23	020021-010	PLUG #10MB	1
24	011941-006	ADAPTER, #6 MB - #8 MJ	1
25	011934-026	ADAPTER, 90° #4 MB - #6 MJ	1
26	011941-016	ADAPTER, #10 MB - #12 MJ	1

VALVE MANIFOLD ASSEMBLY, LX50 FOUR-WHEEL DRIVE

067489-001

ITEM	PART NO.	DESCRIPTION	QTY.
1	067489-001	VALVE BLOCK	1
2	067489-002	VALVE, BI-DIRECTIONAL RELIEF	1
3	067489-003	VALVE, 3 POS - 4 WAY	1
4	067489-004	VALVE, 2 WAY N.C.	1
5	067489-005	VALVE, 2 POS - 3 WAY	1
6	067489-006	VALVE, PROPORTIONAL	1
7	067489-007	VALVE, RELIEF	1
8	067489-008	VALVE, SOL. 2 POS 3 WAY	5
9	067489-009	VALVE, COUNTERBALANCE	2
10	067489-010	ORIFICE (.060 DIA.)	1
11	067489-011	VALVE, SHUTTLE	4
13	020021-012	PLUG, #12 MB	1
14	011941-005	ADAPTER, #6 MB - #6 MJ	3
15	011941-009	ADAPTER, #8 MB - #6 MJ	1
16	011941-015	ADAPTER, #10 MB - #10 MJ	4
17	011941-020	ADAPTER, #12 MB - #12 MJ	1
18	011934-003	ADAPTER, 90° #6 MB - #4 MJ	2
19	063965-001	PLUG, GUAGE PORT	3
20	020021-004	PLUG, #4 MB	2
23	020021-010	PLUG #10MB	1
24	011941-006	ADAPTER, #6 MB - #8 MJ	1
25	011934-026	ADAPTER, 90° #4 MB - #6 MJ	1
26	011941-016	ADAPTER, #10 MB - #12 MJ	1

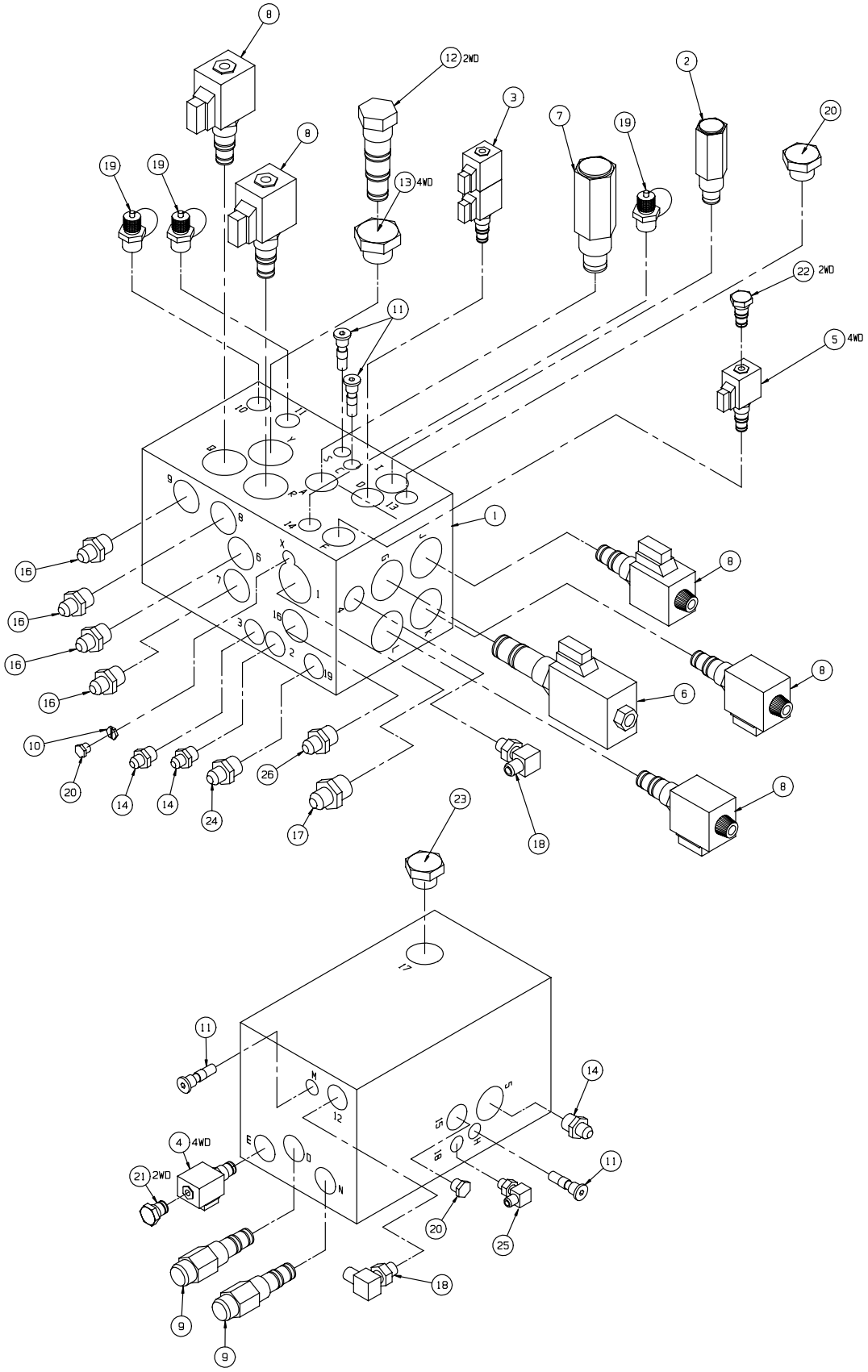
8
12 2WD
2
3
7
19
20
8
19
19
13 4WD
22 2WD
11
5 4WD
1
16
16
16
16
8
8
6
10
20
14
14
24
26
17
18
8
23
11
14
4 4WD
21 2WD
11
20
25
18
9
9

FUEL TANK ASSEMBLY, LX50
DUAL FUEL
067485-000

ITEM	PART NO.	DESCRIPTION	QTY.
1	067837-000	ROTOMOLDED FUEL TANK	1
2	011919-002	PLUG FITTING, MP #4	1
3	010178-003	BARBED FITTING, 1/4	1
4	068982-002	FUEL CAP	1
5	011974-003	SQ. HEAD DRAIN PLUG, NPT, 3/8	1

Note: Serial No.'s 1000 - 2697 used metal tanks,
serial no.'s 2698 - current use plastic tanks

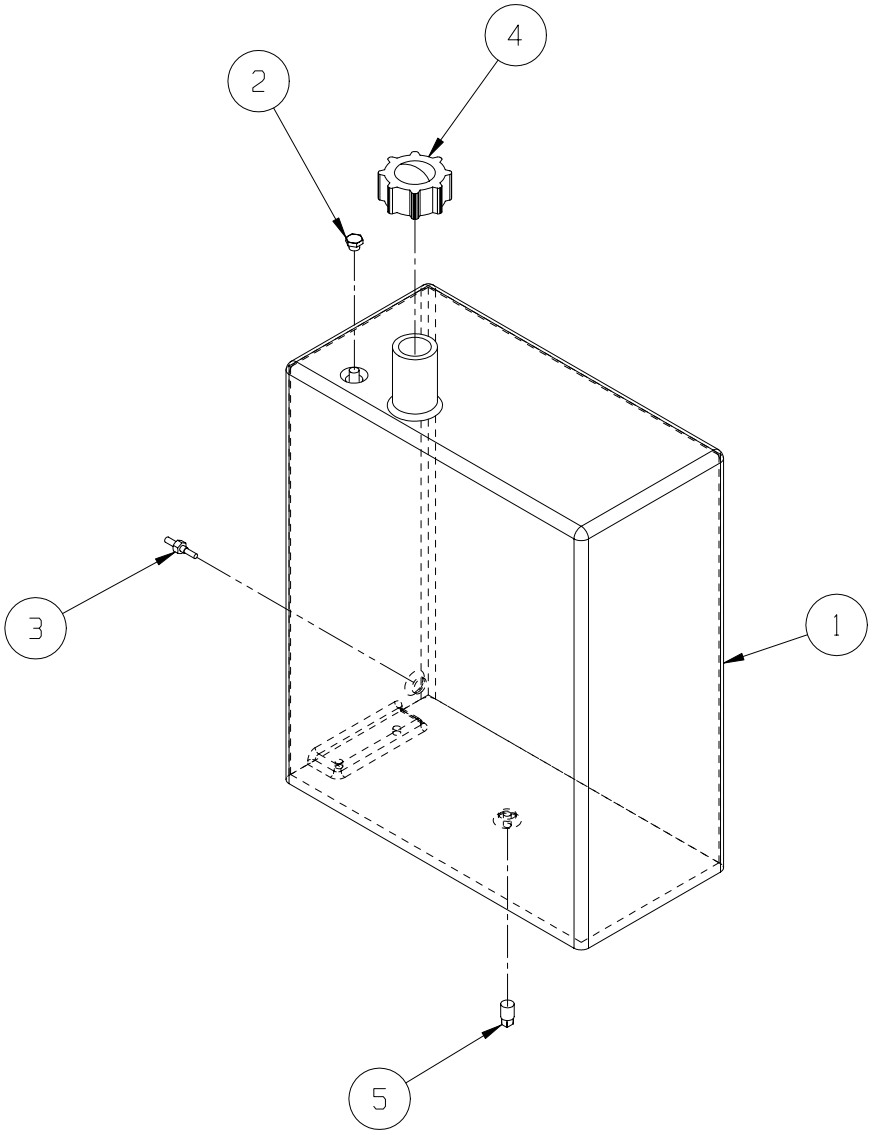

FUEL TANK ASSEMBLY, LX50
DIESEL
067485-001

ITEM	PART NO.	DESCRIPTION	QTY.
1	067837-000	ROTOMOLDED FUEL TANK	1
2	010178-001	BARBED FITTING, 3/16	1
3	010178-003	BARBED FITTING, 1/4	1
4	068982-000	FUEL CAP	1
5	011974-003	SQ. HEAD DRAIN PLUG, NPT, 3/8	1
6	067488-000	WITHDRAWAL TUBE WLDMT	1
7	03556-001	BUSHING, 2FP-4MP	1

Note: Serial No.'s 1000 - 2697 used metal tanks, serial no.'s 2698 - current use plastic tanks

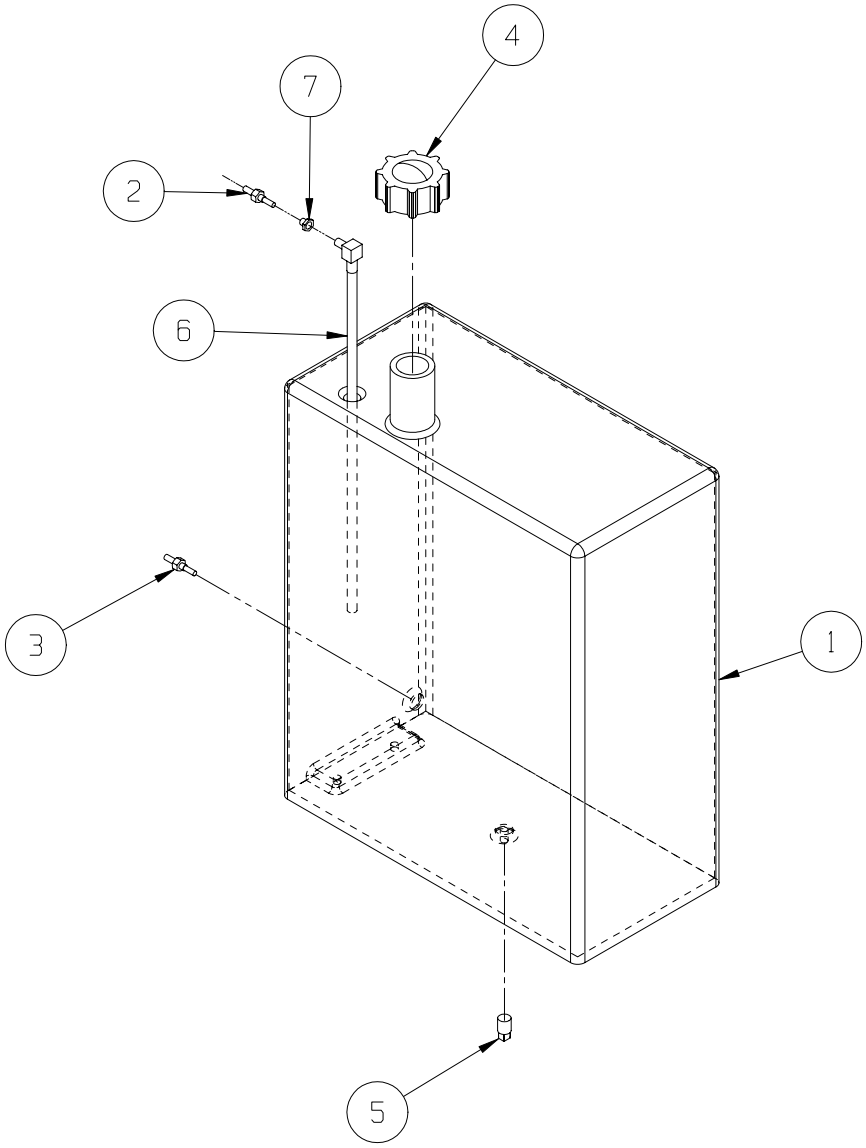

WIRE HARNESS, LX50
MAIN CONTROL

067492-001

ITEM	PART NO.	DESCRIPTION	QTY.
1	029352-099	WIRE 16GA. RED/WHT	8 FT
2	029452-099	WIRE 16GA. BLK	17 FT
3	029364-099	WIRE 16GA. TAN	1.5 FT
4	029467-099	WIRE 14GA. GRY	3.5 FT
5	029451-099	WIRE 16GA. WHT	3.5 FT
6	-	WIRE 14GA. BLU/WHT	9.5 FT
7	029468-099	WIRE 14GA BLU/BLK	3.5 FT
8	029453-099	WIRE 16GA. ORG	6.5 FT
9	029350-099	WIRE, 16GA. GRN/BLK	9.5 FT
10	029477-099	WIRE, 16GA. ORG/BLK	3.5 FT
11	029363-099	WIRE, 16GA. ORG/WHT	3.5 FT
12	029365-099	WIRE, 16GA. PNK/WHT	11.5 FT
13	029450-099	WIRE, 16GA. DRK BLU	12 FT
14	029366-099	WIRE, 16GA. PNK	12.5 FT
15	029456-099	WIRE, 16GA. YEL	12.5 FT
16	029367-099	WIRE, 16GA. TAN/ORG	6.5 FT
17	-	WIRE, 16GA. BRN/YEL	12.5 FT
18	-	WIRE, 16GA. PPL/BLK	6.5 FT
19	029450-099	WIRE, 16GA. BLU	6.5 FT
20	029458-099	WIRE, 16GA. PPL	6.5 FT
21	029355-099	WIRE, 16GA. BLK/RED	6.5 FT
22	-	WIRE, 16GA. GRY/BLK	6.5 FT
23	029359-099	WIRE, 16GA. RED/GRN	6.5 FT
24	-	WIRE, 16GA. GRY/RED	6.5 FT
25	-	WIRE, 16GA. BRN/RED	6.5 FT
26	029479-099	WIRE, 16GA. WHT/BLK	6.5 FT
27	029358-099	WIRE, 16GA. BLU/RED	6.5 FT
28	-	WIRE, 16GA. YEL/BLU	6.5 FT
29	-	WIRE, 16GA. GRY/WHT	6.5 FT
30	029931-003	CONN, FEMALE PUSH, 16-14GA., .25 TAB	4
31	068760-000	DT CONNECTOR, PLUG, DT06-12SA	2
32	068761-001	LOCKING WEDGE, PLUG, W12S	2
33	068762-001	SOCKET, 16-14AWG	22
34	068764-000	PLUG, CONNECTOR SEAL	2
35	068908-003	BOOT ELECT. PLUG, DT6S-BT	1
36	068908-001	BOOT ELECT. PLUG, DT12S-BT	2
37	067990-002	LOCKING WEDGE, PLUG, W6S	1
38	067990-000	DT CONNECTOR, PLUG, DT06-6SA	1

ILLUSTRATED PARTS BREAKDOWN

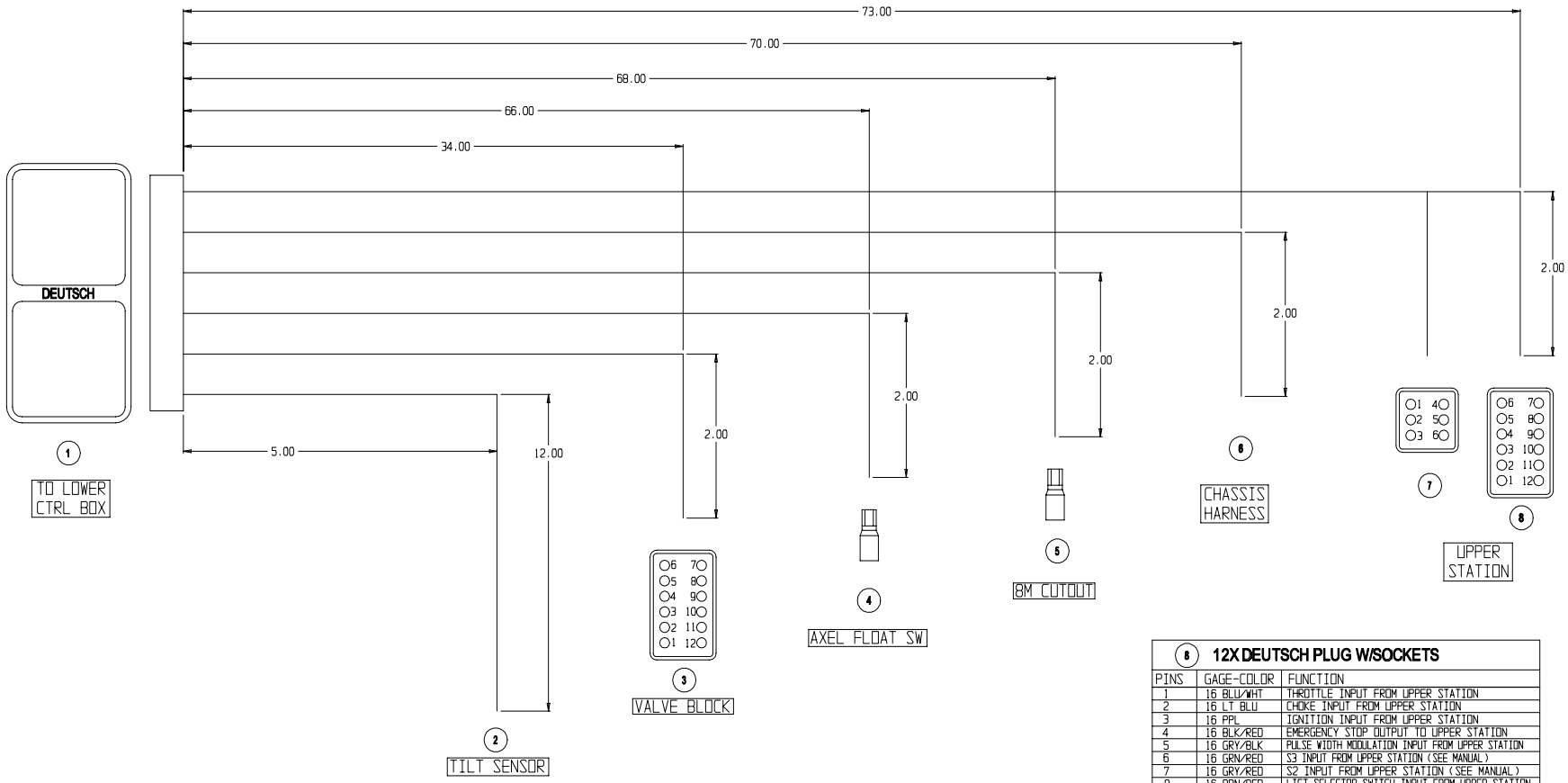

8 12X DEUTSCH PLUG W/SOCKETS

PINS	GAGE-COLOR	FUNCTION
1	16 BLU/WHT	THROTTLE INPUT FROM UPPER STATION
2	16 LT BLU	CHOKE INPUT FROM UPPER STATION
3	16 PPL	IGNITION INPUT FROM UPPER STATION
4	16 BLK/RED	EMERGENCY STOP OUTPUT TO UPPER STATION
5	16 GRY/BLK	PULSE WIDTH MODULATION INPUT FROM UPPER STATION
6	16 GRN/RED	S3 INPUT FROM UPPER STATION (SEE MANUAL)
7	16 GRY/RED	S2 INPUT FROM UPPER STATION (SEE MANUAL)
8	16 BRN/RED	LIFT SELECTOR SWITCH INPUT FROM UPPER STATION
9	16 WHT/BLK	TORQUE SWITCH INPUT FROM UPPER STATION
10	16 RED/BLU	STEER RIGHT INPUT FROM UPPER STATION
11	16 YEL/BLU	STEER LEFT INPUT FROM UPPER STATION
12	16 GRY/WHT	HIGH SPEED ENGAGE TO UPPER STATION

1 40X DEUTSCH PLUG W/SOCKETS

PINS	GAGE-COLOR	FUNCTION	PINS	GAGE-COLOR	FUNCTION
1	16 GRY/WHT	HI SPEED ENGAGE TO UPPER STATION	21	16 PNK	LIMIT SW OUTPUT TO CHASSIS
2	16 YEL/BLU	STEER LEFT INPUT FROM UPPER STATION	22	16 ORG/WHT	FORWARD OUTPUT TO VALVE BODY
3	16 RED/BLU	STEER RIGHT INPUT FROM UPPER STATION	23	16 ORG/BLK	REVERSE OUTPUT TO VALVE BODY
4	16 WHT/BLK	TORQUE SW INPUT FROM UPPER STATION	24	16 GRN/WHT	LIFT OUTPUT TO VALVE BODY
5	16 BRN/RED	LIFT SELECTOR SW INPUT FROM UPPER STATION	25	16 ORG	SERIES/PARALLEL (SHUNT)
6	16 PPL/BLK	PLATFORM POWER OUTPUT TO UPPER STATION RELAY	26	16 ORG	SERIES/PARALLEL OUTPUT TO VALVE BODY
7	16 GRY/RED	S2 INPUT FROM UPPER STATION (SEE MANUAL)	27	14 GRN/BLK	DOWN TO HYDRAULIC CYLINDER
8	16 GRN/RED	S3 INPUT FROM UPPER STATION (SEE MANUAL)	28	14 BLU/WHT	STEER RIGHT OUTPUT TO VALVE BODY
9	16 GRY/BLK	PULSE WIDTH MODULATION IN FROM UPPER STATION	29	14 BLU/BLK	STEER LEFT OUTPUT TO VALVE BODY
10	16 BLK	GROUND	30	16 TAN	LEVEL SENSOR PLATFORM DOWN SW INPUT FROM CHASSIS
11	16 YEL	PLATFORM DOWN SW I/P FROM CHASSIS (LS3)	31	16 BLK	GROUND
12	16 PNK/WHT	AXLE FLOAT SW OUTPUT TO CHASSIS	32	16 BLK	GROUND
13	16 PNK/WHT	AXLE FLOAT SW INPUT FROM CHASSIS	33	16 RED/WHT	VCC (12 VOLT)
14	16 BRN/YEL	DRIVE ENABLE LT OUTPUT TO UPPER STATION	34	16 YEL	PLATFORM DOWN SWITCH
15	16 BRN/YEL	DRIVE ENABLE LT INPUT FROM UPPER STATION	35	16 RED/WHT	VCC (12 VOLT)
16	16 BLK/RED	EMERG. STOP OUTPUT TO UPPER STATION	36	16 DRK BLU	8 METER LIMIT INPUT FROM CHASSIS
17	16 TAN/ORG	START INPUT FROM UPPER STATION	37	16 DRK BLU	8 METER LIMIT OUTPUT TO CHASSIS
18	16 PPL	IGNITION INPUT FROM UPPER STATION	38	16 PNK	LIMIT SWITCH INPUT FROM CHASSIS
19	16 LT BLU	CHOKE INPUT FROM UPPER STATION	39	16 WHT	AXLE FLOAT OUTPUT TO VALVE BODY
20	16 BLU/WHT	THROTTLE INPUT FROM UPPER STATION	40	14 GRY	PULSE WIDTH MODULATION OUTPUT TO VALVE BODY

2 BLUNT CUT

TERM	GAGE-COLOR	FUNCTION
BLUNT	16 RED/WHT	VCC (12 VOLT)
BLUNT	16 BLK	GROUND
BLUNT	16 TAN	LEVEL SENSOR PLATFORM DOWN SWITCH INPUT FROM CHASSIS

3 12X DEUTSCH PLUG W/SOCKETS

TERM	GAGE-COLOR	FUNCTION
1	14 GRY	PULSE WIDTH MODULATION OUTPUT TO VALVE BODY
2	16 WHT	AXLE FLOAT OUTPUT TO VALVE BODY
3	14 BLU/WHT	STEER RIGHT OUTPUT TO VALVE BODY
4	14 BLU/BLK	STEER LEFT OUTPUT TO VALVE BODY
5	16 ORG	SERIES/PARALLEL OUTPUT TO VALVE BODY
6	16 ORG	SERIES/PARALLEL (SHUNT)
7	16 GRN/WHT	LIFT OUTPUT TO VALVE BODY
8	16 ORG/BLK	REVERSE OUTPUT TO VALVE BODY
9	16 ORG/WHT	FORWARD OUTPUT TO VALVE BODY
10	16 BLK	GROUND

4 .250 FISO'S

TERM	GAGE-COLOR	FUNCTION
.250 FISO	16 PNK/WHT	AXLE FLOAT SWITCH INPUT FROM CHASSIS
.250 FISO	16 PNK/WHT	AXLE FLOAT SWITCH OUTPUT TO CHASSIS

5 .250 FISO'S

TERM	GAGE-COLOR	FUNCTION
.250 FISO	16 DRK BLU	8 METER LIMIT OUTPUT TO CHASSIS
.250 FISO	16 DRK BLU	8 METER LIMIT INPUT FROM CHASSIS

6 BLUNT CUT

TERM	GAGE-COLOR	FUNCTION
BLUNT	16 PNK	LIMIT SWITCH INPUT FROM CHASSIS
BLUNT	16 RED/WHT	VCC (12 VOLT)
BLUNT	16 YEL	PLATFORM DOWN SWITCH
BLUNT	16 BLK	GROUND
BLUNT	16 GRN/BLK	DOWN TO HYDRAULIC CYLINDER
BLUNT	16 PNK	LIMIT SWITCH OUTPUT TO CHASSIS
BLUNT	16 YEL	PLATFORM DOWN SWITCH INPUT FROM CHASSIS (LS3)

7 6X DEUTSCH PLUG W/SOCKETS

PINS	GAGE-COLOR	FUNCTION
1	16 BLK	GROUND
2	16 TAN/ORG	START INPUT FROM UPPER STATION
3	16 BRN/YEL	DRIVE ENABLE LIGHT INPUT FROM UPPER STATION
4	16 BRN/YEL	DRIVE ENABLE LIGHT OUTPUT TO UPPER STATION
5	16 PPL/BLK	PLATFORM POWER OUTPUT TO UPPER STATION RELAY

WIRE HARNESS, LX50
VALVE BLOCK

067492-002

ITEM	PART NO.	DESCRIPTION	QTY.
1	029467-099	WIRE 14GA. GRY	3 FT
2	029451-099	WIRE 16GA. WHT	5 FT
3	029468-099	WIRE 14GA. BLU/WHT	1.6 FT
4	029469-099	WIRE 14GA. BLU/BLK	4 FT
5	029453-099	WIRE 16GA. ORG	3 FT
6	029353-099	WIRE 16GA. GRN/WHT	7.5 FT
7	029477-099	WIRE 16GA ORG/BLK	4 FT
8	029363-099	WIRE 16GA. ORG/WHT	2 FTT
9	029452-099	WIRE 16GA. BLK	7 FT
10	068760-001	DT CONNECTOR, PLUG, # DT04-12SA	1
11	068761-000	LOCKING WEDGE, PLUG, W12P	1
12	068762-000	CONTACT PIN, 16-18 AWG	11
13	068908-000	BOOT ELECT. RECEPTIACLE, # DT-12-P-BT	1
14	068764-000	PLUG-CONNECTOR SEAL	2
15	067475-099	WIRE LOOM, 3/8” DIA.	1.9 FT
16	029931-003	CONN. FEMALE PUSH, 16-14 AWG, .25 TAB	20
17	029620-002	CONN., BUTT, 16-14 GA.	1
18	067476-099	WIRE LOOM, 5/8” DIA.	2.1 FT

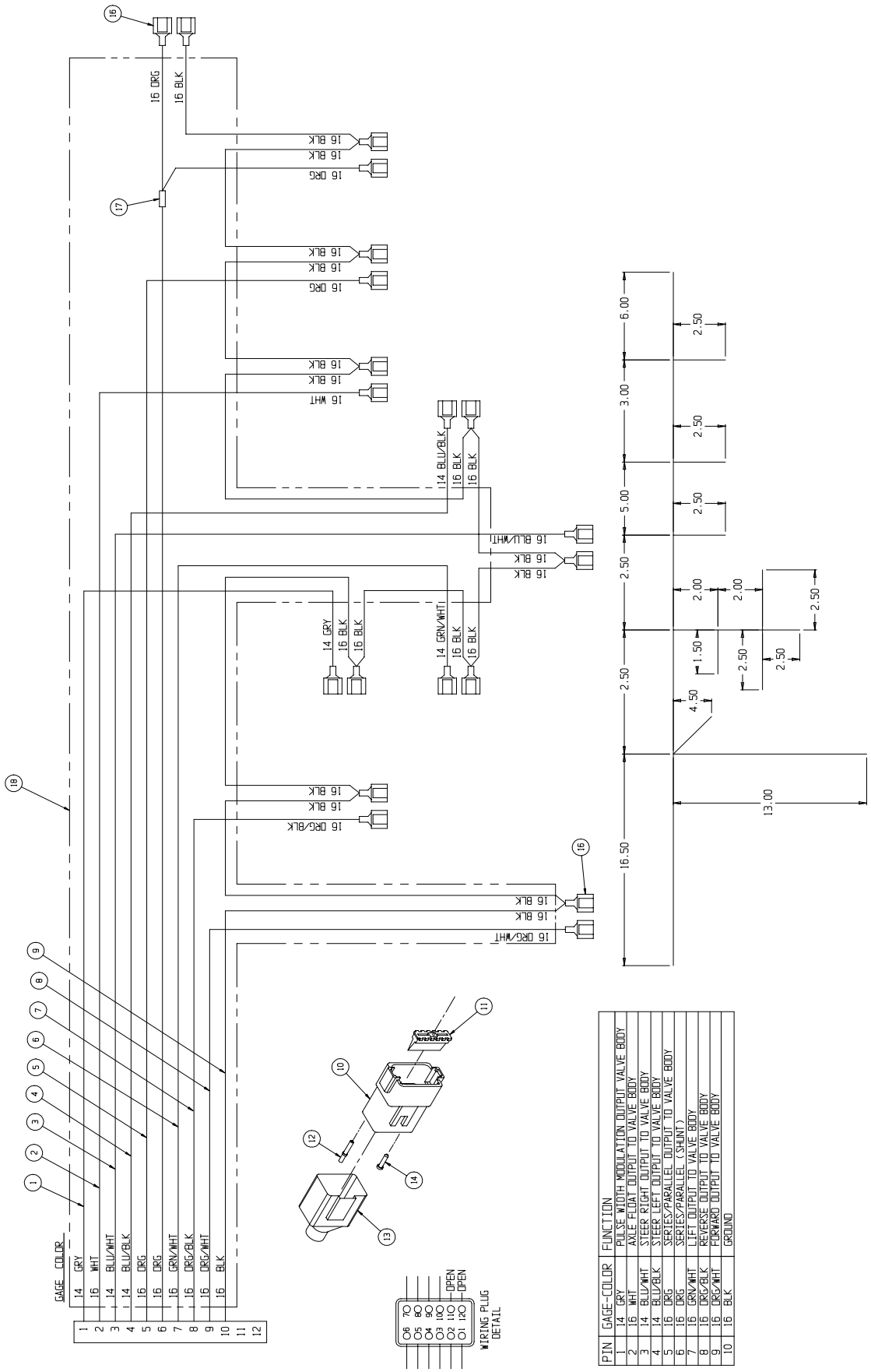

PIN	GAGE-COLOR	FUNCTION
1	14 GRY	PULSE WIDTH MODULATION OUTPUT VALVE BODY
2	16 WHT	AXLE FLOAT OUTPUT TO VALVE BODY
3	14 BLU/WHT	STEER RIGHT OUTPUT TO VALVE BODY
4	14 BLU/BLK	STEER LEFT OUTPUT TO VALVE BODY
5	16 ORG	SERIES/PARALLEL OUTPUT TO VALVE BODY
6	16 ORG	SERIES/PARALLEL (SHUNT)
7	16 GRN/WHT	LIFT OUTPUT TO VALVE BODY
8	16 ORG/BLK	REVERSE OUTPUT TO VALVE BODY
9	16 ORG/WHT	FORWARD OUTPUT TO VALVE BODY
10	16 BLK	GROUND

WIRE HARNESS, LX50
DUAL FUEL ENGINE

067492-004

ITEM	PART NO.	DESCRIPTION	QTY.
1	029461-099	WIRE 14GA. BLK	4 FT
2	-	WIRE 14GA RED/WHT	4 FT
3	029460-099	WIRE 14GA. RED	6 FT
4	-	WIRE 16GA. DRK BLU	6 FT
5	-	WIRE 16GA. DRK GRN	7 FT
6	029463-099	WIRE 14GA. YEL	7 FT
7	029451-099	WIRE 16GA. WHT	6 FT
8	029453-099	WIRE 16GA. ORG	5 FT
9	-	WIRE 16GA. LT BLU	7 FT
11	029931-003	CONN. F PUSH 16-14GA. .25	14
12	029601-013	CONN RING, #10 16-14	5
13	029601-024	CONN RING, 1/4	1
14	029480-099	WIRE, 10GA. RED	6 FT
15	029601-039	CONN RING, 5/16 10-12	1
16	029620-002	CONN. BUTT, 16-14 GA.	9
17	029601-015	CONN RING, 3/8 16-14	1
18	029452-099	WIRE, 16GA. BLK	10 FT
19	029825-002	DIODE 5A 400V	3
20	068760-000	DT CONNECTOR, PLUG, # DT06-12SA	1
21	068761-001	LOCKING WEDGE, PLUG, W12S	1
22	015790-003	CONTACT SOCKET, 16-18 AWG	11
23	068908-001	BOOT ELECT. RECEPTIACLE, # DT-12-P-BT	1
24	068764-000	PLUG-CONNECTOR SEAL	1
25	012865-099	WIRE LOOM, 3/4” DIA.	3 FT
26	067475-099	WIRE LOOM, 3/8” DIA.	1.5 FT

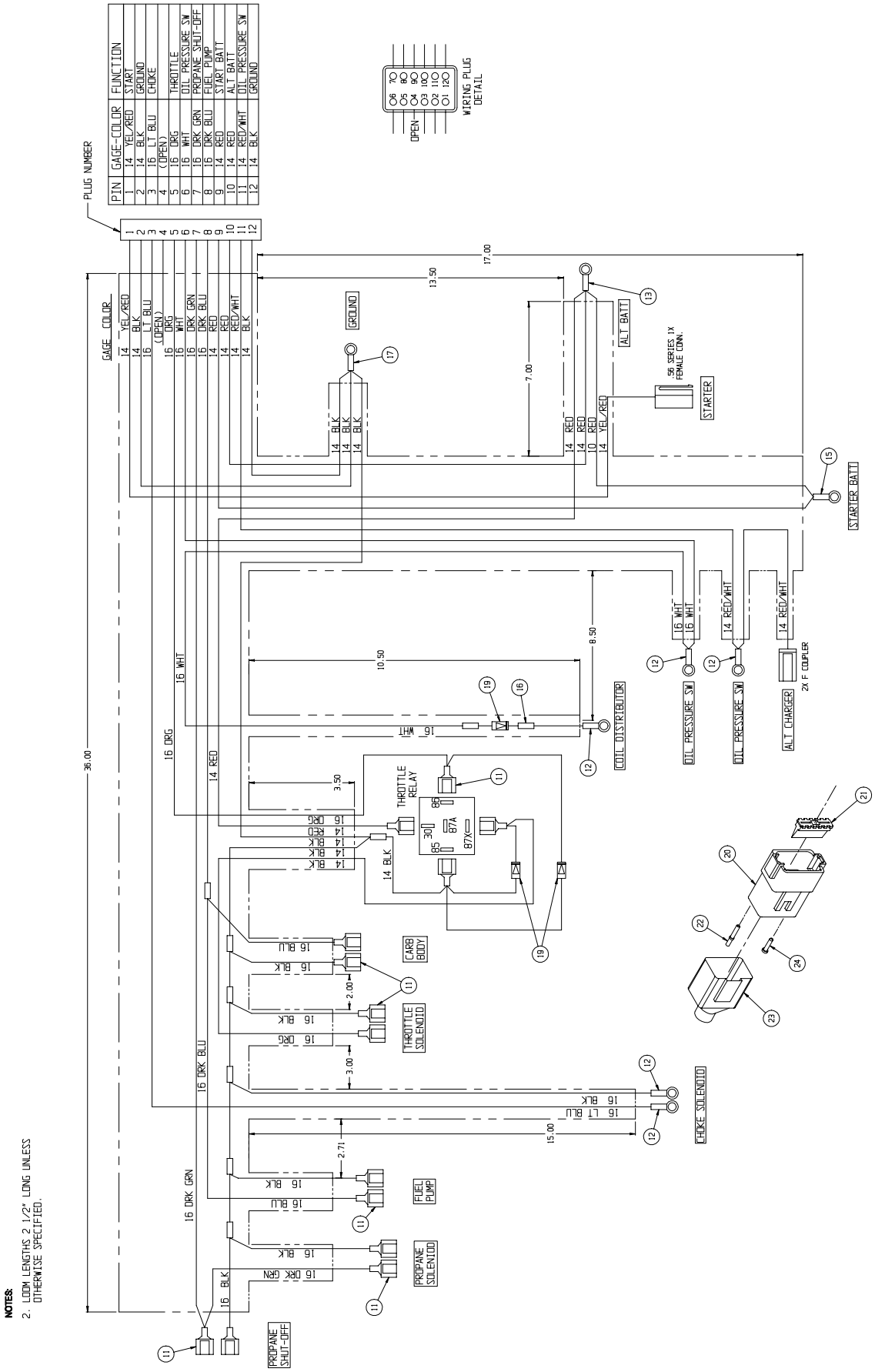
PLUG NUMBER
PIN GAGE-COLOR FUNCTION
1 14 YEL/RED START
2 14 BLK GROUND
3 16 LT BLU CHOKE
4 (OPEN)
5 16 ORG THROTTLE
6 16 WHT OIL PRESSURE SW
7 16 DRK GRN PROPANE SHUT-OFF
8 16 DRK BLU FUEL PUMP
9 14 RED START BATT
10 14 RED ALT BATT
11 14 RED/WHT OIL PRESSURE SW
12 14 BLK GROUND
WIRING PLUG DETAIL
OPEN
GAGE COLOR
GROUND
ALT BATT
.56 SERIES 1X FEMALE CONN.
STARTER
STARTER BATT
OIL PRESSURE SW
ALT CHARGER
2X F COUPLER
COIL DISTRIBUTOR
THROTTLE RELAY
CARB BODY
THROTTLE SOLENOID
CHOKE SOLENOID
FUEL PUMP
PROPANE SOLENOID
PROPANE SHUT-OFF
17.00
13.50
7.00
8.50
10.50
3.50
2.00
3.00
2.71
15.00
36.00
NOTES:
2. LOOM LENGTHS 2 1/2" LONG UNLESS OTHERWISE SPECIFIED.

WIRE HARNESS, LX50
DIESEL ENGINE

067492-005

ITEM	PART NO.	DESCRIPTION	QTY.
1	-	WIRE 14GA. YEL/RED	3 FT
2	029461-099	WIRE 14GA. BLK	5 FT
3	029354-099	WIRE 16GA. BLU/WHT	1.6 FT
4	029453-099	WIRE 16GA. ORG	4 FT
5	029451-099	WIRE 16GA. WHT	3 FT
6	029460-099	WIRE 14GA. RED	7.5 FT
7	-	WIRE 14GA RED/WHT	4 FT
8	029479-099	WIRE 16GA. WHT/BLK	2 FT
9	029452-099	WIRE, 16GA. BLK	7 FT
10	029480-099	WIRE, 10GA. RED	6 FT
11	029478-099	WIRE, 16GA. RED/BLK	2 FT
12	029931-003	CONN. F PUSH 16-14GA. .25	15
13	029601-013	CONN RING, #10 16-14	3
14	029461-040	CONN RING, 5/16 14-16	1
15	029601-039	CONN RING, 5/16 10-12	4
16	029620-002	CONN. BUTT, 16-14 GA.	1
17	068760-000	DT CONNECTOR, PLUG, # DT06-12SA	1
18	068761-001	LOCKING WEDGE, PLUG, W12S	1
19	015790-003	CONTACT SOCKET, 16-18 AWG	11
20	068908-001	BOOT ELECT. RECEPTIACLE, # DT-12-P-BT	1
21	068764-000	PLUG-CONNECTOR SEAL	3
22	012865-099	WIRE LOOM, 3/4” DIA.	3 FT
23	067475-099	WIRE LOOM, 3/8” DIA.	1.5 FT
24	029601-020	CONN RING, 1/4 10-12	1
25	029601-019	CONN RING, #10 10-12	1
26	029825-002	DIODE 5 AMP 400V	4

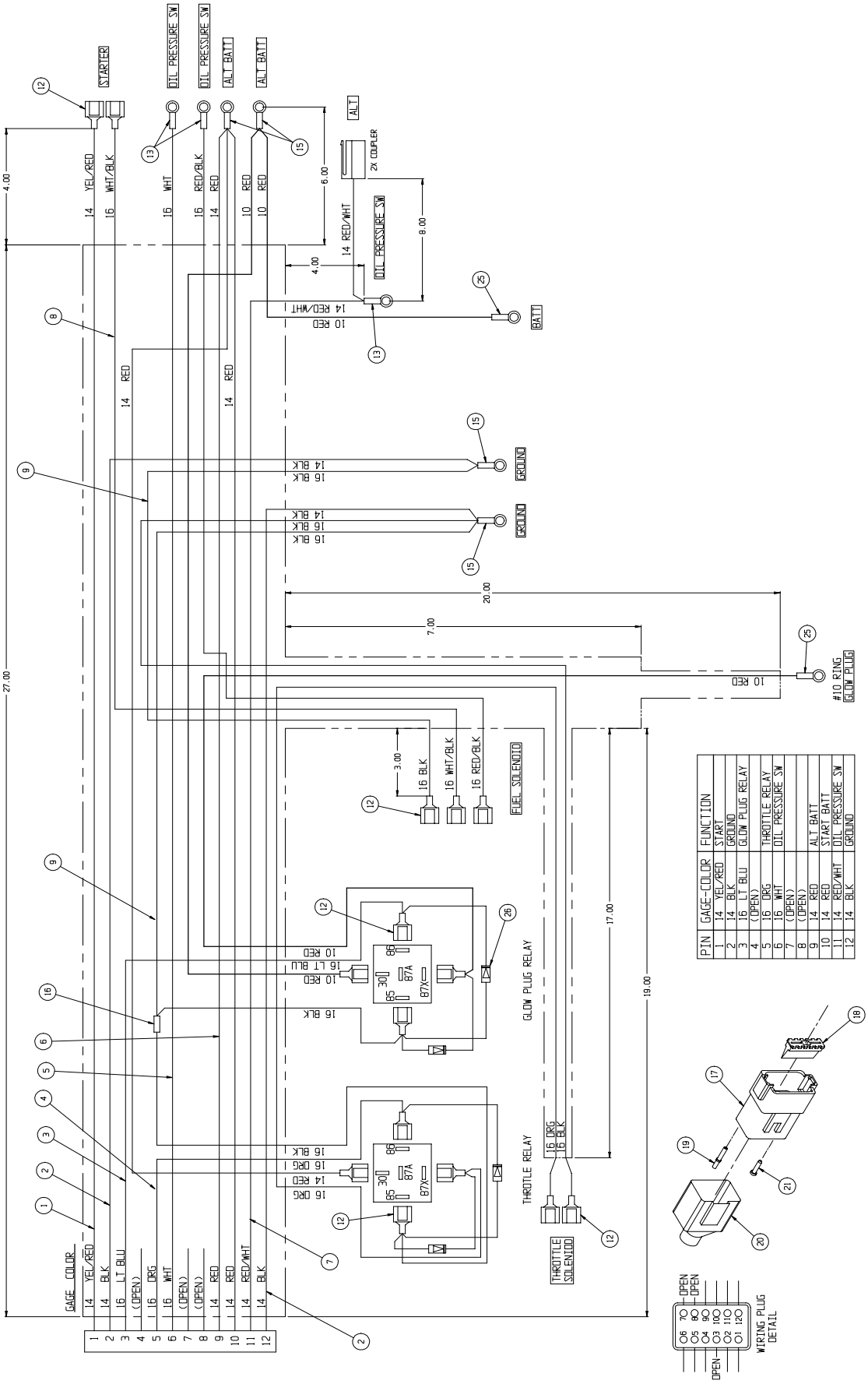

PIN	GAGE-COLOR	FUNCTION
1	14 YEL/RED	START
2	14 BLK	GROUND
3	16 LT BLU	GLOW PLUG RELAY
4	(OPEN)	
5	16 ORG	THROTTLE RELAY
6	16 WHT	OIL PRESSURE SW
7	(OPEN)	
8	(OPEN)	
9	14 RED	ALT BATT
10	14 RED	START BATT
11	14 RED/WHT	OIL PRESSURE SW
12	14 BLK	GROUND

WIRE HARNESS, LX50 OUTRIGGER EXTENSION

067492-006

ITEM	PART NO.	DESCRIPTION	QTY.
1	-	WIRE 14GA. YEL/RED	3 FT
2	029461-099	WIRE 14GA. BLK	5 FT
3	029450-099	WIRE 16GA. BLU	1.6 FT
4	029453-099	WIRE 16GA. ORG	4 FT
5	029451-099	WIRE 16GA. WHT	3 FT
6	029460-099	WIRE 14GA. RED	7.5 FT
7	-	WIRE 14GA RED/WHT	4 FT
8	029479-099	WIRE 16GA. WHT/BLK	2 FT
9	029452-099	WIRE, 16GA. BLK	7 FT
10	029480-099	WIRE, 10GA. RED	6 FT
11	029478-099	WIRE, 16GA. RED/BLK	2 FT
12	029931-003	CONN. F PUSH 16-14GA. .25	8
13	029601-013	CONN RING, #10 16-14	8
14	029601-012	CONN RING, #8 16-14	8
15	029601-020	CONN RING, 1/4 10-12	1
17	068760-000	DT CONNECTOR, PLUG, # DT06-12SA	1
18	068761-001	LOCKING WEDGE, PLUG, W12S	1
19	015790-003	CONTACT SOCKET, 16-18 AWG	11
20	068908-001	BOOT ELECT. RECEPTIACLE, # DT-12-P-BT	1
21	068764-000	PLUG-CONNECTOR SEAL	3
22	012865-099	WIRE LOOM, 3/4” DIA.	3 FT
23	067475-099	WIRE LOOM, 3/8” DIA.	1.5 FT

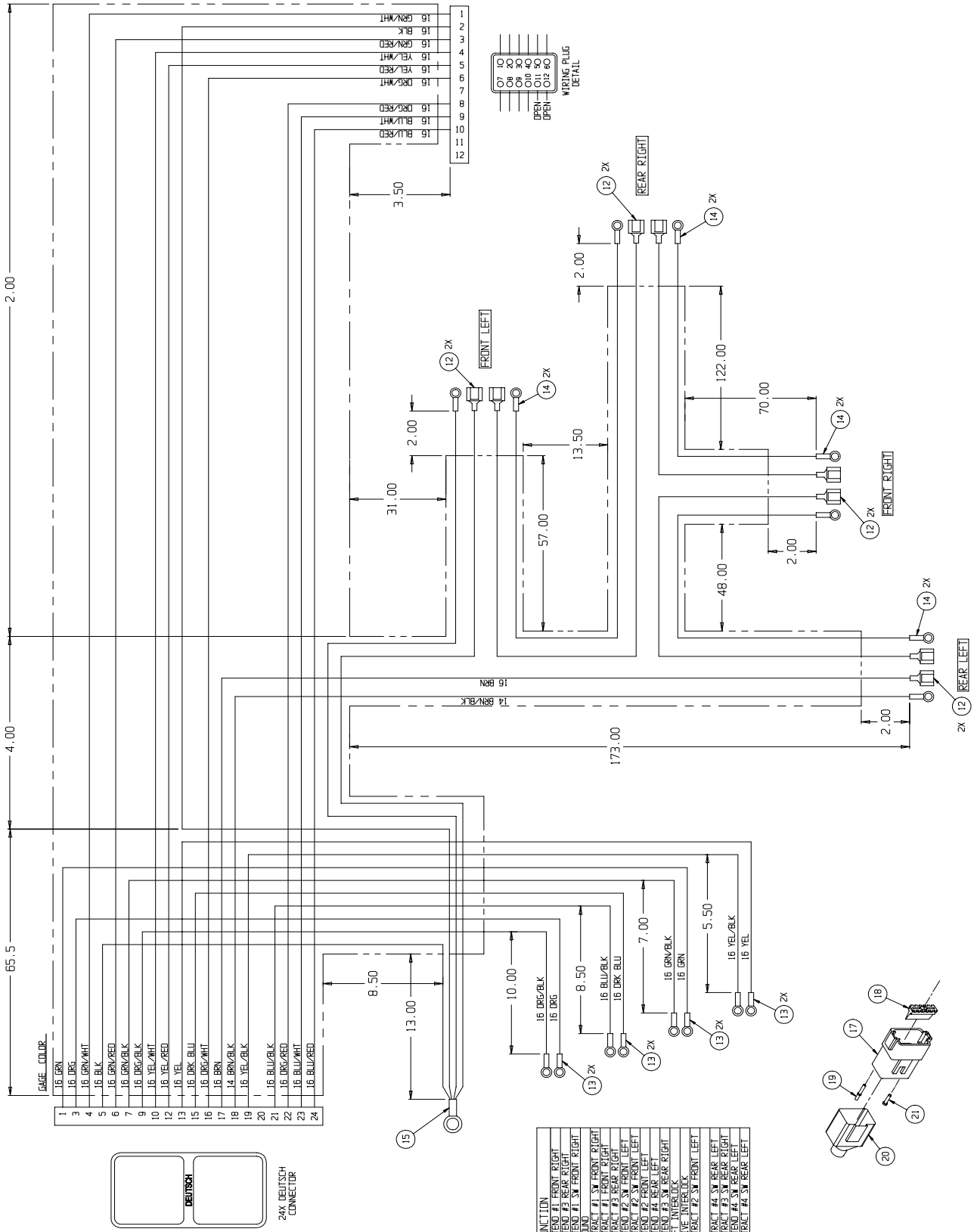

PIN	GAGE-COLOR	FUNCTION
1	16 GRN	EXTEND #1 FRONT RIGHT
3	16 ORG	EXTEND #3 REAR RIGHT
4	16 GRN/WHT	EXTEND #1 SW FRONT RIGHT
5	16 BLK	GROUND
6	16 GRN/RED	RETRACT #1 SW FRONT RIGHT
7	16 GRN/BLK	RETRACT #1 FRONT RIGHT
9	16 ORG/BLK	RETRACT #3 REAR RIGHT
10	16 YEL/WHT	EXTEND #2 SW FRONT LEFT
12	16 YEL/RED	RETRACT #2 SW FRONT LEFT
13	16 YEL	EXTEND #2 FRONT LEFT
15	16 DRK BLU	EXTEND #4 REAR LEFT
16	16 ORG/WHT	EXTEND #3 SW REAR RIGHT
17	16 GRN	LIFT INTERLOCK
18	14 BRN/BLK	DRIVE INTERLOCK
19	16 YEL/BLK	RETRACT #2 SW FRONT LEFT
21	16 BLU/BLK	RETRACT #4 SW REAR LEFT
22	16 ORG/RED	RETRACT #3 SW REAR RIGHT
23	16 BLU/WHT	EXTEND #4 SW REAR LEFT
24	16 BLU/RED	RETRACT #4 SW REAR LEFT

WIRE HARNESS, LX50
ENGINE EXTENSION

067492-012

ITEM	PART NO.	DESCRIPTION	QTY.
1	029461-099	WIRE 14GA. BLK	9 FT
2	-	WIRE 14GA RED/WHT	9 FT
3	029460-099	WIRE 14GA. RED	9 FT
4	-	WIRE 16GA. DRK BLU	9 FT
5	-	WIRE 16GA. DRK GRN	9 FT
6	-	WIRE 14GA. YEL/RED	9 FT
7	029451-099	WIRE 16GA. WHT	9 FT
8	029453-099	WIRE 16GA. ORG	9 FT
9	029459-099	WIRE 16GA. LT BLU	9 FT
10	068760-000	DT CONNECTOR, PLUG, # DT06-12SA	1
11	068761-001	LOCKING WEDGE, PLUG, W12S	1
12	068762-001	CONTACT SOCKET, 16-18 AWG	11
13	068908-000	BOOT ELECT., # DT-12-P-BT	1
14	068760-001	DT CONNECTOR, RECEPTACLE, # DT04-12SA	1
15	068761-000	LOCKING WEDGE, W12P	1
16	068762-000	CONTACT PIN, 16-18 AWG	11
17	068908-001	BOOT ELECT., # DT-12-S-BT	1
18	068764-000	PLUG-CONNECTOR SEAL	2
19	012865-099	WIRE LOOM, 3/4” DIA.	8.8 FT

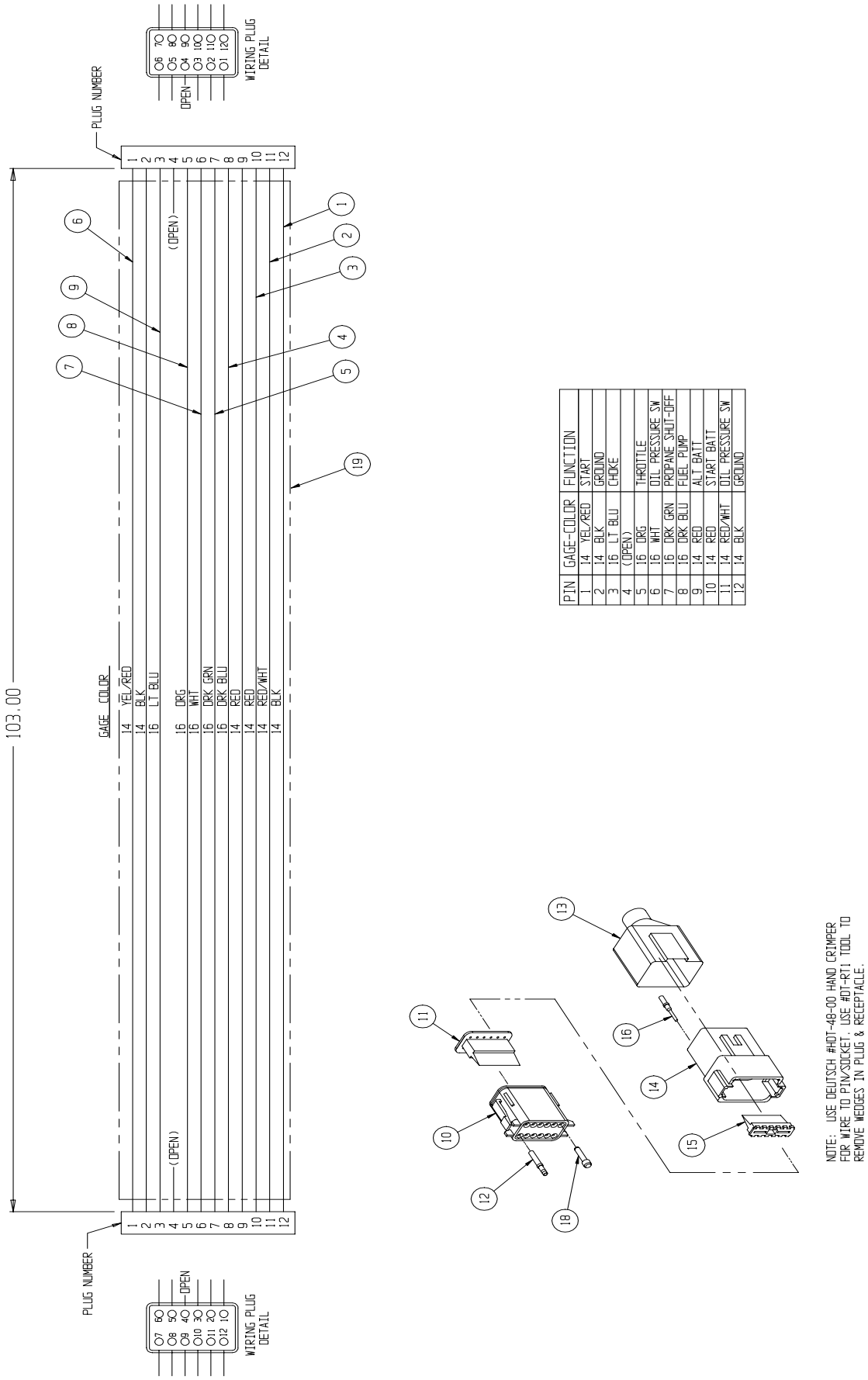

PIN	GAGE-COLOR	FUNCTION
1	14 YEL/RED	START
2	14 BLK	GROUND
3	16 LT BLU	CHOKE
4	(OPEN)	
5	16 ORG	THROTTLE
6	16 WHT	OIL PRESSURE SW
7	16 DRK GRN	PROPANE SHUT-OFF
8	16 DRK BLU	FUEL PUMP
9	14 RED	ALT BATT
10	14 RED	START BATT
11	14 RED/WHT	OIL PRESSURE SW
12	14 BLK	GROUND

OUTRIGGER OPTION, LX50 DUAL FUEL

067950-010

ITEM	PART NO.	DESCRIPTION	QTY.
1	067844-000	OUTRIGGER SUPPORT WELDMENT	4
2	067840-000	OUTRIGGER CYL.	4
3	067953-010	HOSE INSTALLATION, LX OUTRIGGER	1
5	011248-008	NUT HEX ESNA 1/2-13 UNC	16
6	011256-020	SCREW HHC 1/2-13UNC X 2 1/2	16
7	062881-000	SWITCH BALL	4
8	063921-006	SWITCH PRESS.	4
9	066516-004	PLUG	4
10	064462-002	GROMMET, CAPLUG #GRO-1/2-UL	4
11	011941-005	FITTING 6MB-6MJ	4
12	011934-004	FITTING 6MBH-6MJ 90	4
13	011937-003	FITTING 6FJX-6MJ 90	4
14	066556-001	LABEL CAUTION (DOMESTIC)	4
15	066556-201	LABEL CAUTION (GERMAN)	4
16	066556-301	LABEL CAUTION (FRENCH)	4

OUTRIGGER OPTION, LX50 DIESEL

067950-011

ITEM	PART NO.	DESCRIPTION	QTY.
1	067844-000	OUTRIGGER SUPPORT WELDMENT	4
2	067840-000	OUTRIGGER CYL.	4
3	067953-010	HOSE INSTALLATION, LX OUTRIGGER	1
5	011248-008	NUT HEX ESNA 1/2-13 UNC	16
6	011256-020	SCREW HHC 1/2-13UNC X 2 1/2	16
7	062881-000	SWITCH BALL	4
8	063921-006	SWITCH PRESS.	4
9	066516-004	PLUG	4
10	064462-002	GROMMET, CAPLUG #GRO-1/2-UL	4
11	011941-005	FITTING 6MB-6MJ	4
12	011934-004	FITTING 6MBH-6MJ 90	4
13	011937-003	FITTING 6FJX-6MJ 90	4
14	066556-001	LABEL CAUTION (DOMESTIC)	4
15	066556-201	LABEL CAUTION (GERMAN)	4
16	066556-301	LABEL CAUTION (FRENCH)	4

Note: Outriggers are standard on Dual Deck models.

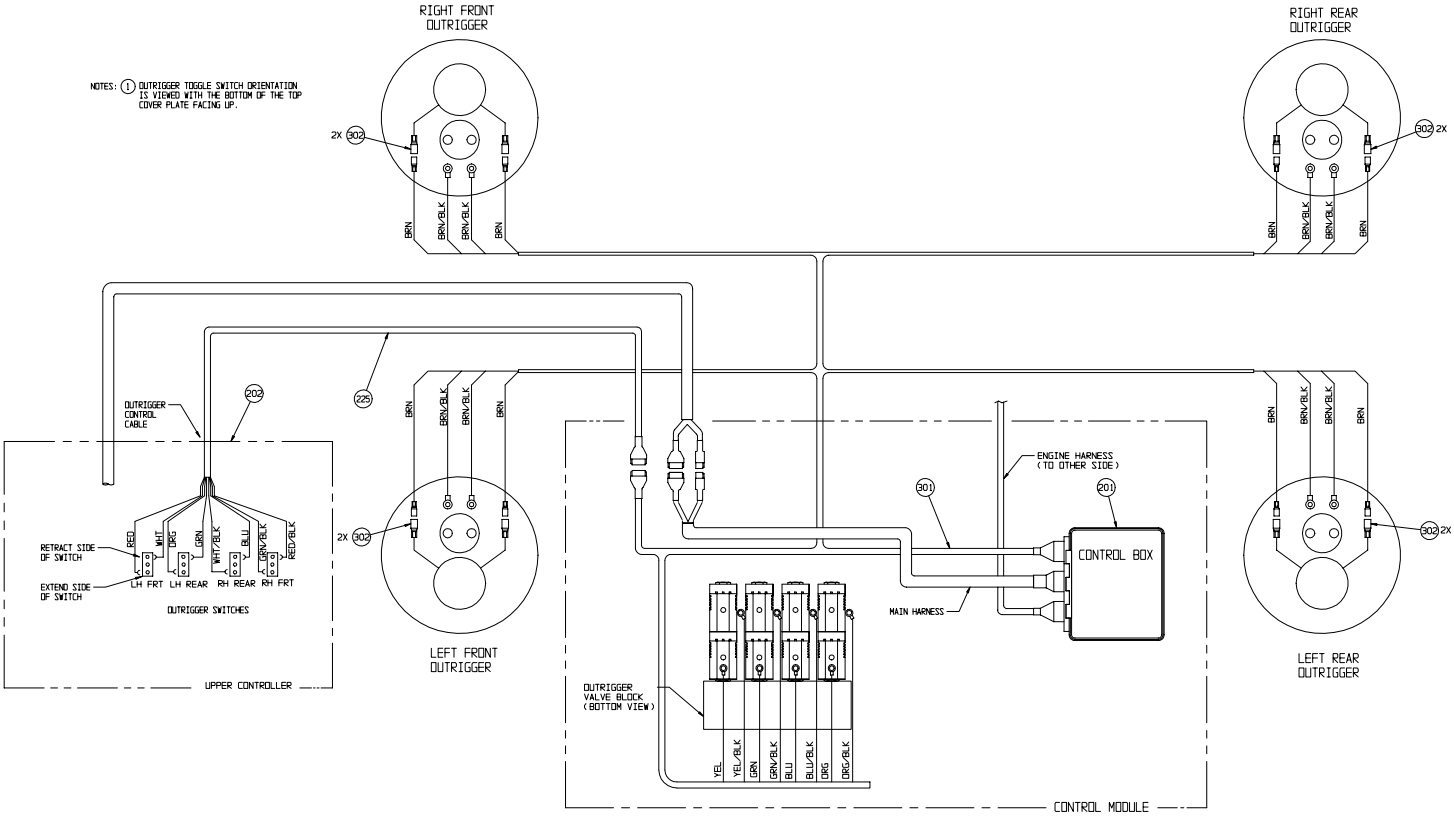

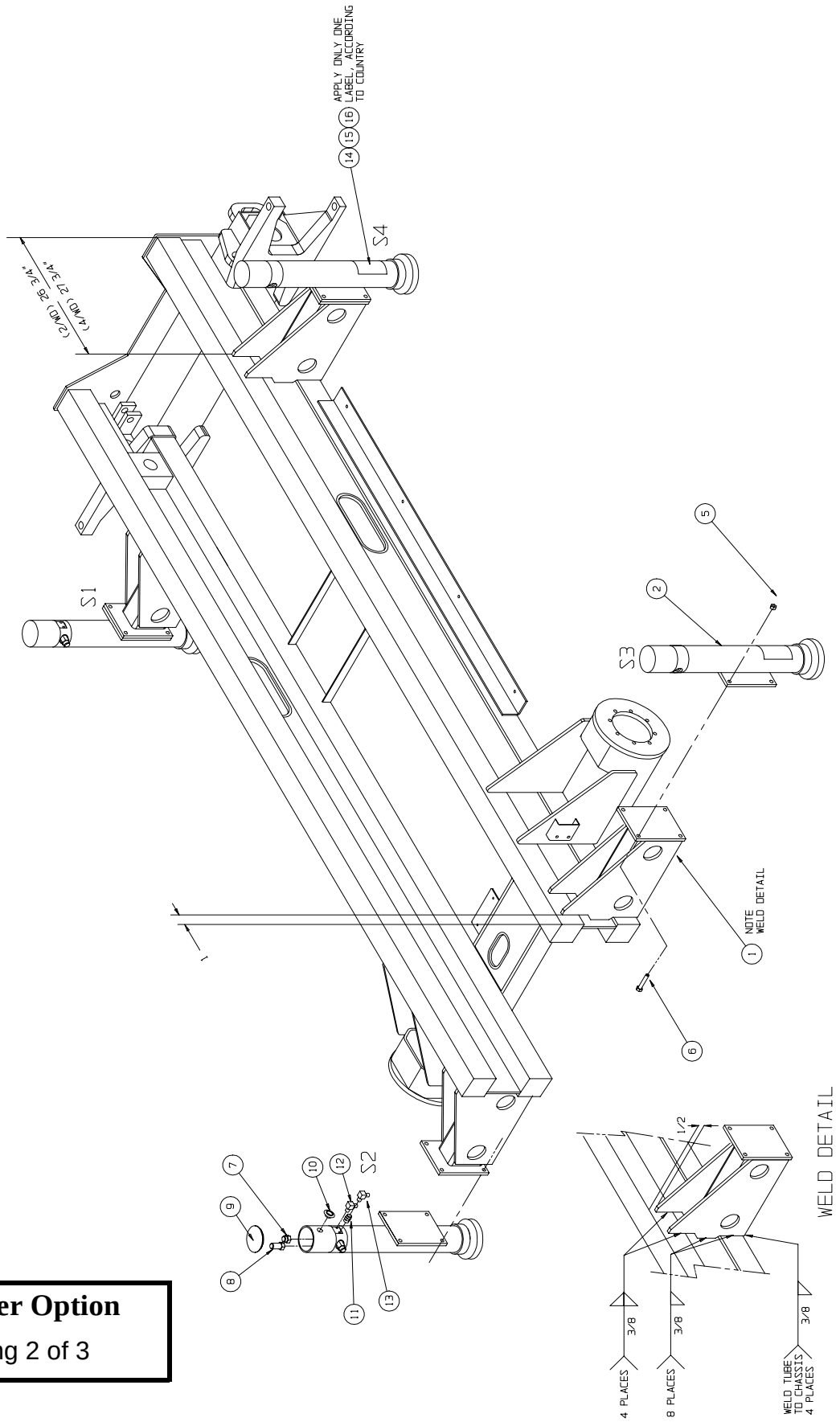

Outrigger Option

Drawing 2 of 3

OUTRIGGER OPTION, LX50
DUAL FUEL
067950-010

ITEM	PART NO.	DESCRIPTION	QTY.
201	067491-003	CONTROLLER ASSY (DUAL FUEL)	1
203	067528-011	UPPER CONTROLLER ASSY	1
204	067490-000	OUTRIGGER VALVE BLOCK ASSY	1
205	011252-032	SCREW, HHC, 1/4-20 X 4	2
206	011248-004	NUT, 1/4-20, ESNA	6
207	000942-000	ORBIT LEVEL	1
208	005133-000	SPRING	3
209	011721-008	SCREW, RND HD, MACH., 4-40 X 1	3
211	014924-008	U-BOLT	2
212	011248-049	NUT, HEX, 4-40, ESNA	3
213	020733-005	TEE, 12FJ-12MJ-6MJ	2
214	014693-003	ADAPTER, 12FJ-6MJ	2
215	011941-001	4MB-4MJ	1
216	067642-004	LABEL-CONTROLLER (DOMESTIC)	1
217	067642-204	LABEL-CONTROLLER (GERMAN)	1
218	067642-304	LABEL-CONTROLLER (FRENCH)	1
219	067480-001	LABEL-LED CODES (DOMESTIC)	1
220	067480-201	LABEL-LED CODES (GERMAN)	1
221	067480-301	LABEL-LED CODES (FRENCH)	1
222	066551-003	LABEL-DANGER TIPPING (DOMESTIC)	1
223	066551-203	LABEL-DANGER TIPPING (GERMAN)	1
224	066551-303	LABEL-DANGER TIPPING (FRENCH)	1
225	067479-000	OUTRIGGER CONTROL CABLE ASSY	1
226	064794-000	LEVEL MOUNT	1
301	067492-006	WIRE HARNESS, OUTRIGGER	1
302	014914-001	CONN. MALE PUSH, 16-14 GA., .25 TAB	8

OUTRIGGER OPTION, LX50
DIESEL
067950-011

ITEM	PART NO.	DESCRIPTION	QTY.
201	067491-004	CONTROLLER ASSY (DIESEL)	1
203	067528-011	UPPER CONTROLLER ASSY	1
204	067490-000	OUTRIGGER VALVE BLOCK ASSY	1
205	011252-032	SCREW, HHC, 1/4-20 X 4	2
206	011248-004	NUT, 1/4-20, ESNA	6
207	000942-000	ORBIT LEVEL	1
208	005133-000	SPRING	3
209	011721-008	SCREW, RND HD, MACH., 4-40 X 1	3
211	014924-008	U-BOLT	2
212	011248-049	NUT, HEX, 4-40, ESNA	3
213	020733-005	TEE, 12FJ-12MJ-6MJ	2
214	014693-003	ADAPTER, 12FJ-6MJ	2
215	011941-001	4MB-4MJ	1
216	067642-004	LABEL-CONTROLLER (DOMESTIC)	1
217	067642-204	LABEL-CONTROLLER (GERMAN)	1
218	067642-304	LABEL-CONTROLLER (FRENCH)	1
219	067480-001	LABEL-LED CODES (DOMESTIC)	1
220	067480-201	LABEL-LED CODES (GERMAN)	1
221	067480-301	LABEL-LED CODES (FRENCH)	1
222	066551-003	LABEL-DANGER TIPPING (DOMESTIC)	1
223	066551-203	LABEL-DANGER TIPPING (GERMAN)	1
224	066551-303	LABEL-DANGER TIPPING (FRENCH)	1
225	067479-000	OUTRIGGER CONTROL CABLE ASSY	1
226	064794-000	LEVEL MOUNT	1
301	067492-006	WIRE HARNESS, OUTRIGGER	1
302	014914-001	CONN. MALE PUSH, 16-14 GA., .25 TAB	8

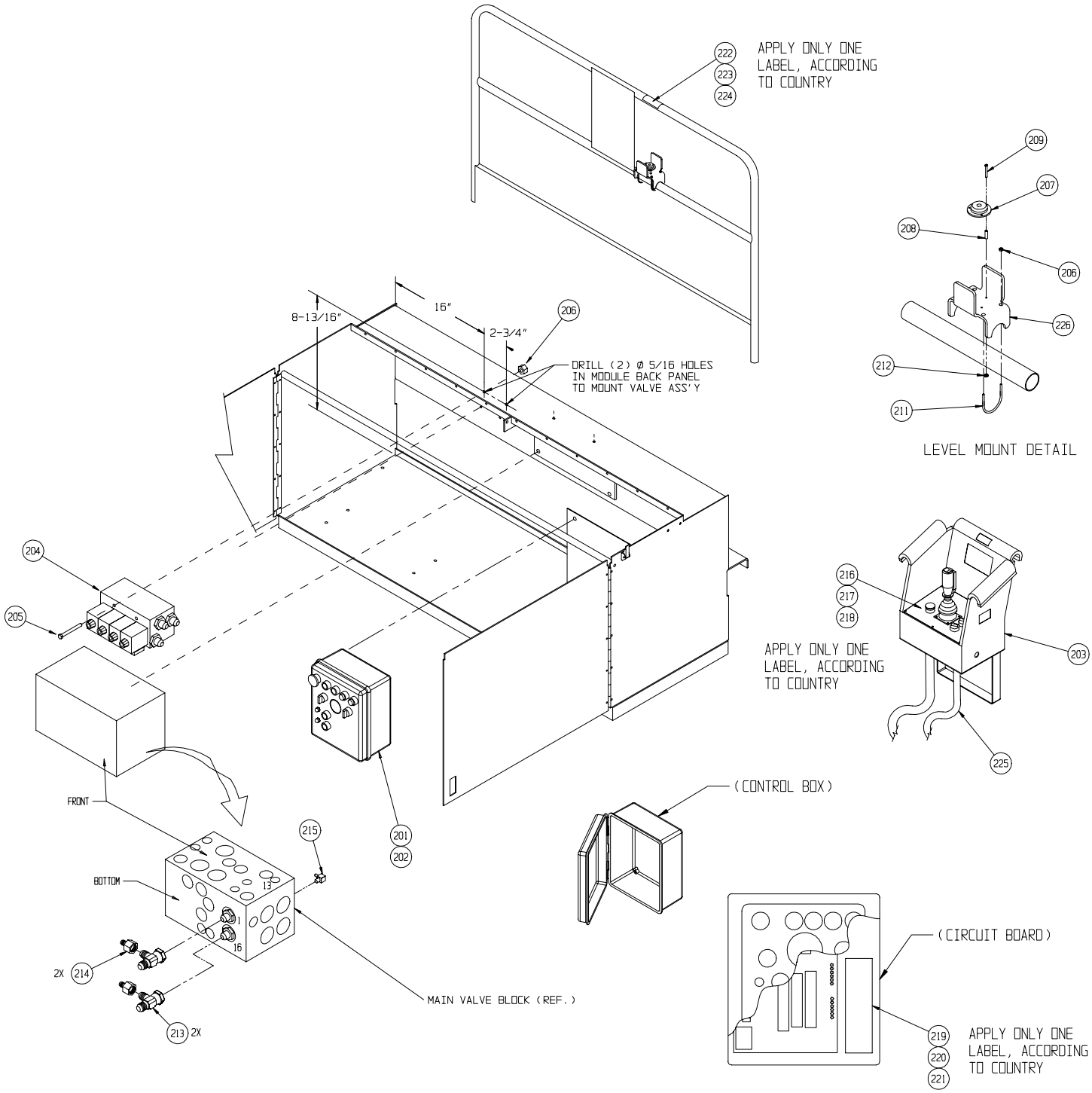

Outrigger Option

Drawing 3 of 3

SLIDE-OUT DECK EXTENSION, LX50
STANDARD DECK ONLY

067866-001

ITEM	PART NO.	DESCRIPTION	QTY.
2	067787-001	SLIDE-OUT DECK WELDMENT	1
3	067760-002	WHEEL, SLIDE-OUT DECK	2
4	066193-000	STOP	2
5	067720-000	ROLLER	2
6	067818-001	ARM, CABLE GUIDE	2
7	067786-001	BRACKET, CABLE GUIDE	1
8	067761-000	PIVOT, PUSH BAR	2
9	067862-003	HANDLE WELDMENT	2
10	066170-002	WEAR PAD	2
11	067776-001	GUARDRAIL WELDMENT	2
12	067778-000	GUARDRAIL WELDMENT	1
13	067755-001	SWING TUBE	2
14	011848-038	CLEVIS PIN, 1/2” DIA. X 2-1/2	2
15	026553-008	RIVET POP ØØ3/16 X .5-.63 GRIP	4
16	011757-005	COTTER PIN, RUE RING	2
17	014996-006	WASHER, FLAT 3/8” DIA	40
18	067695-000	SPACER	4
19	011248-006	LOCKNUT, 3/8-16 UNC ESNA	32
20	012865-099	LOOM, WIRE 3/4”	1
21	011254-008	SCR. HHC 3/8-16 UNC X 1	10
22	011254-014	SCR. HHC 3/8-16 UNC X 1 3/4	4
23	011254-006	SCR. HHC 3/8-16 UNC X 3/4	8
24	015936-014	SCR. SHOU 3/8-16 UNC X 1 3/4	10
25	011254-032	SCR. HHC 3/8-16 UNC X 4	4
26	067920-000	SPACER, GUARDRAIL	2
27	060086-000	SAFETY WALK (20 X 32)	4

ITEM	PART NO.	DESCRIPTION	QTY.
28	066557-001	LABEL PLATFORM CAPY	1
29	067867-001	ROLLER BRACKET REAR WELDMENT L.H.	1
30	067867-000	ROLLER BRACKET REAR WELDMENT R.H.	1
31	063666-004	WIRE CHANNEL	1
32	011253-012	SCR. HHC 5/16-18 X 1-1/2	2
33	011248-005	NUT HEX 5/16-18 ESNA	2
34	011240-005	WASHER 5/16 FLAT STD	4
35	010414-000	LOCKING PIN ASSY 5/16” ØØ	1
36	066556-000	LABEL, WARNING DESEND PLTFM	2
38	066198-000	WEAR PAD	2
39	011252-012	SCR. HH 1/4-20 X 1-1/2	4
40	011248-004	1/4-20 ESNA NUT	4
41	015770-099	HOSE 3/8 DIA X 1-1/2 LG	1
42	067783-003	ROLLER BRACKET RH	2
43	067783-004	ROLLER BRACKET LH	2

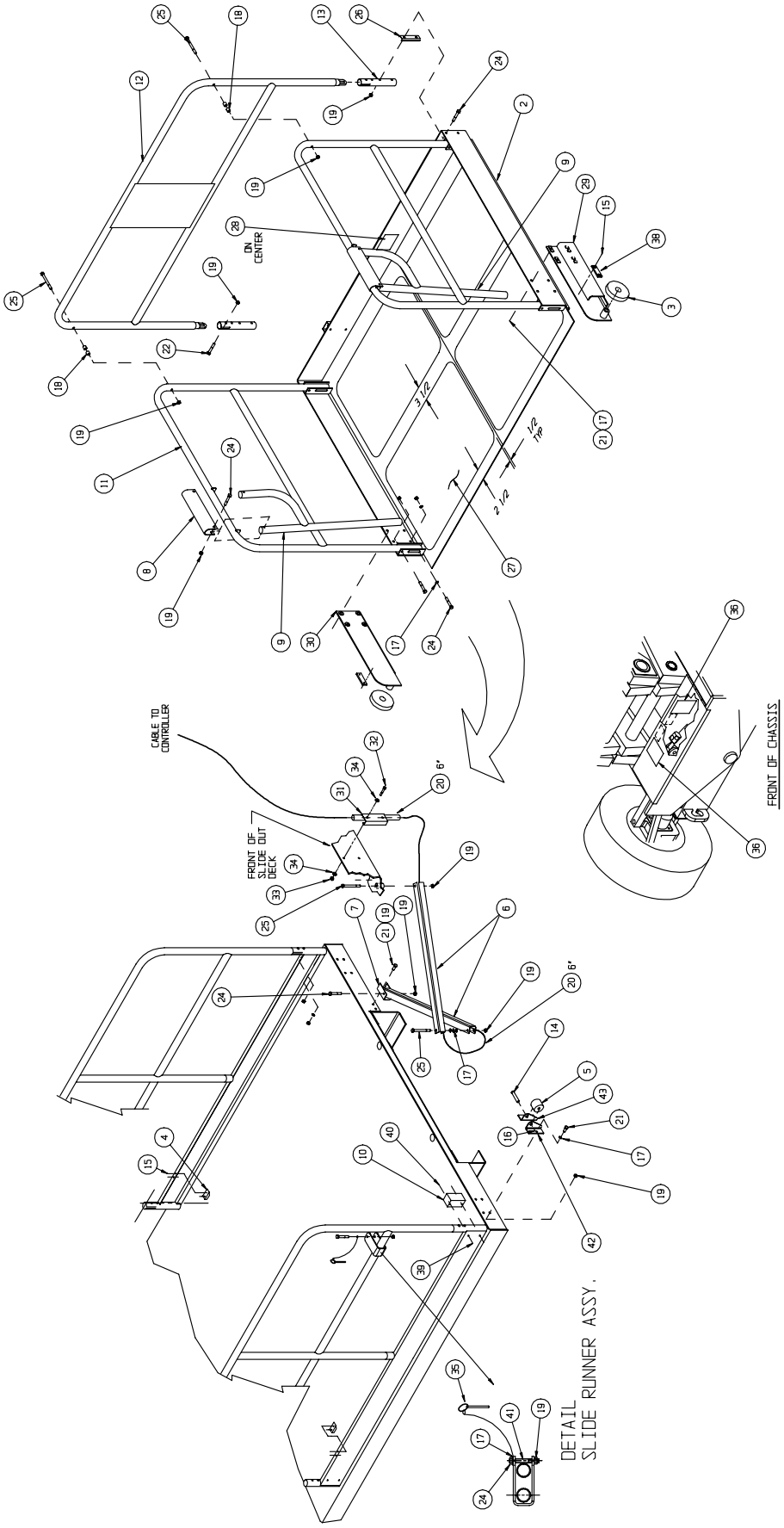
ON CENTER
3 1/2
1/2
1/8
2 1/2
CABLE TO CONTROLLER
FRONT OF SLIDE OUT DECK
6"
FRONT OF CHASSIS
DETAIL
SLIDE RUNNER ASSY.

POWER TO PLATFORM OPTION
LX50
067907-012

ITEM	PART NO.	DESCRIPTION	QTY.
1	067336-000	PLUG INLET W/BOOT, MALE	1
2	067336-001	PLUG INLET W/BOOT, FEMALE	1
3	030719-001	110 VAC BRACKET	1
4	029495-099	WIRE 14 GA 3-COND	84 FT
5	011254-020	SCREW, HHC GRD5 3/8-16UNC X 2 1/2	2

ITEM	PART NO.	DESCRIPTION	QTY.
6	011240-006	WASHER, 3/8, STD FLAT	4
7	011248-006	NUT, HEX, ESNA, 3/8-16	2
8	068639-000	LABEL-POWER TO PLATFORM	1

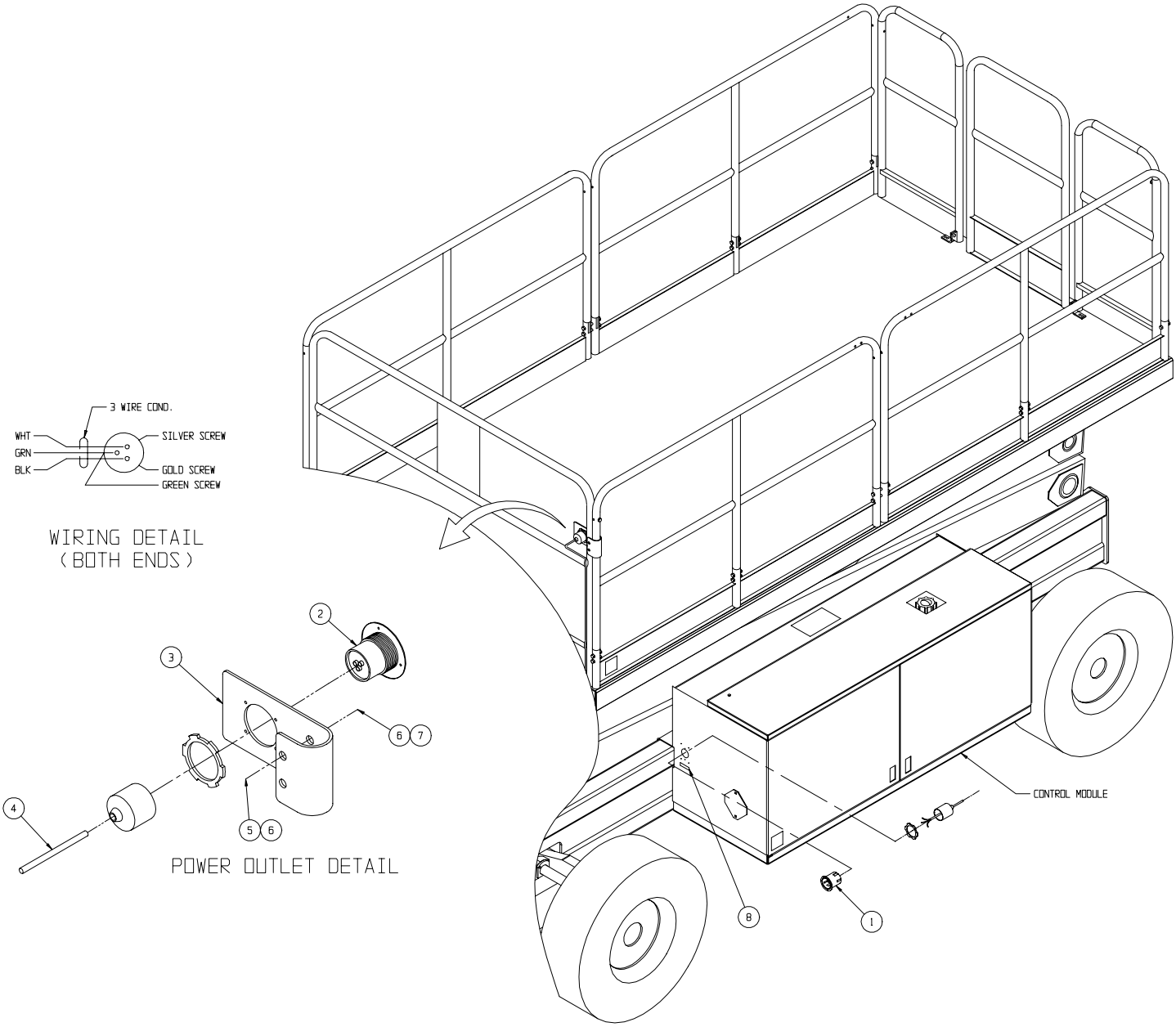

MOTION ALARM OPTION
LX50
067909-010

ITEM	PART NO.	DESCRIPTION	QTY.
1	029452-099	WIRE 16 GA BLK	FT 2
2	029610-002	TERMINAL #8 FORK	4
3	029825-002	DIODE 3 AMP	3

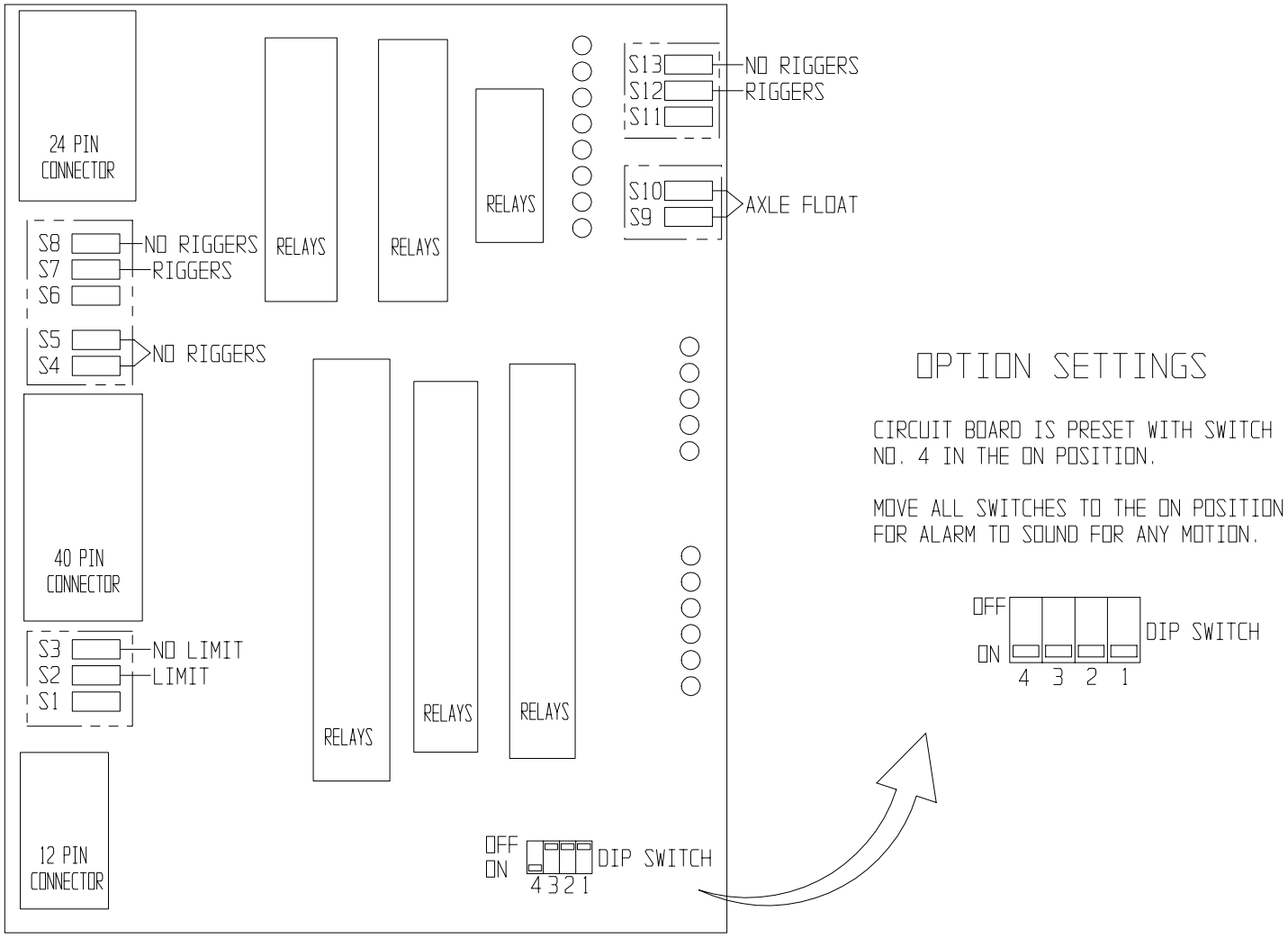

LOWER CONTROL BOX CIRCUIT BOARD

AMBER BEACON OPTION
LX50
067947-010

ITEM	PART NO.	DESCRIPTION	QTY.
1	012848-004	LIGHT 12-24 VOLT	2
2	063193-000	LIGHT BRACKET	2
3	029702-000	FUSE HOLDER	1
4	029704-002	FUSE 2 AMP	1
5	015790-004	CONTACT PIN, 16-18 AWG.	1
6	029601-013	CONN RING 16-14 #10	1
7	029620-002	CONN BUTT 16-14	5

ITEM	PART NO.	DESCRIPTION	QTY.
8	029496-099	WIRE 16 AWG 2 COND	18 FT
9	011249-003	NUT HEX ESNA #10-32	4
10	011826-004	SCREW MACH.RD.HD. #10-32 X 1/2	4
11	029451-099	WIRE, 16 GA., WHITE	6 FT

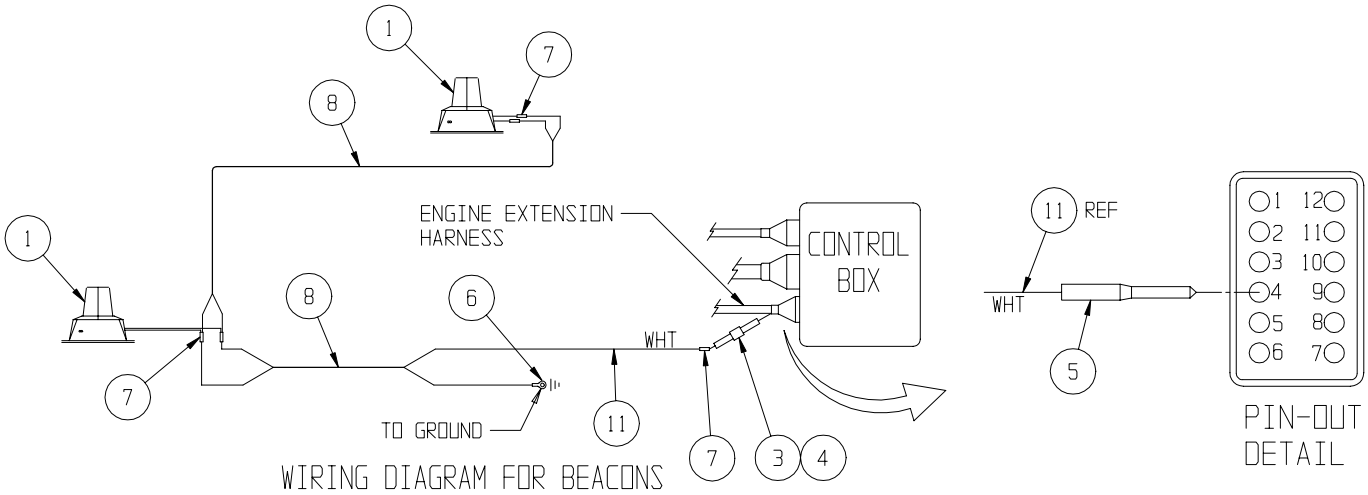

WIRING DIAGRAM FOR BEACONS

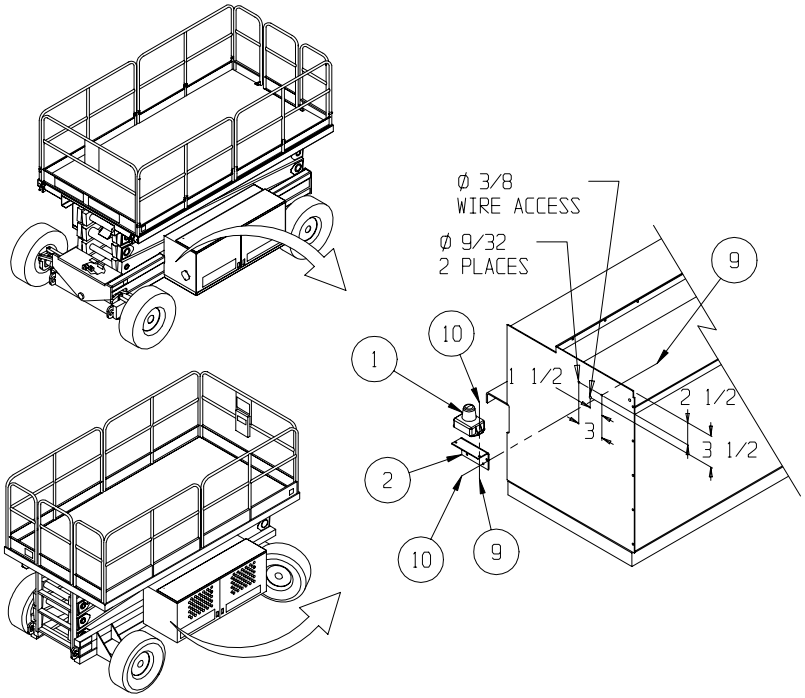

HORN OPTION
LX50
067908-001

ITEM	PART NO.	DESCRIPTION	QTY.
1	011252-008	SCREW HHC 1/4-20 X 1	2
2	011248-004	NUT HEX 1/4-20	2
3	029452-099	WIRE 16 GA BLACK	FT 75
4	067902-000	BRACKET, GAS SPRING	1
5	029610-002	CONNECTOR FORK	3
6	029601-014	CONNECTOR RING	2
7	029615-002	CONECTOR PUSH	2
8	029958-001	HORN 24VDC	1
9	063917-000	SWITCH PUSHBUTTON	1
10	029704-007	FUSE, 7 AMP	1

ITEM	PART NO.	DESCRIPTION	QTY.
11	011248-005	NUT HEX ESNA 5/16-18	1
12	011253-008	SCREW HHC 5/16-18UNC X 1	1
13	029704-003	FUSE, 3 AMP	1
14	029702-000	FUSE HOLDER	2
15	029825-002	DIODE, 5 AMP 400V	2
16	029454-099	WIRE 16 GA RED	FT 3
17	068132-001	RELAY, AUTOMOTIVE	1
18	011248-003	LOCKNUT HEX 10-32	1
19	011826-005	SCREW RND HD 10-32	1
20	015790-004	CONTACT PIN 16-18 AWG	1

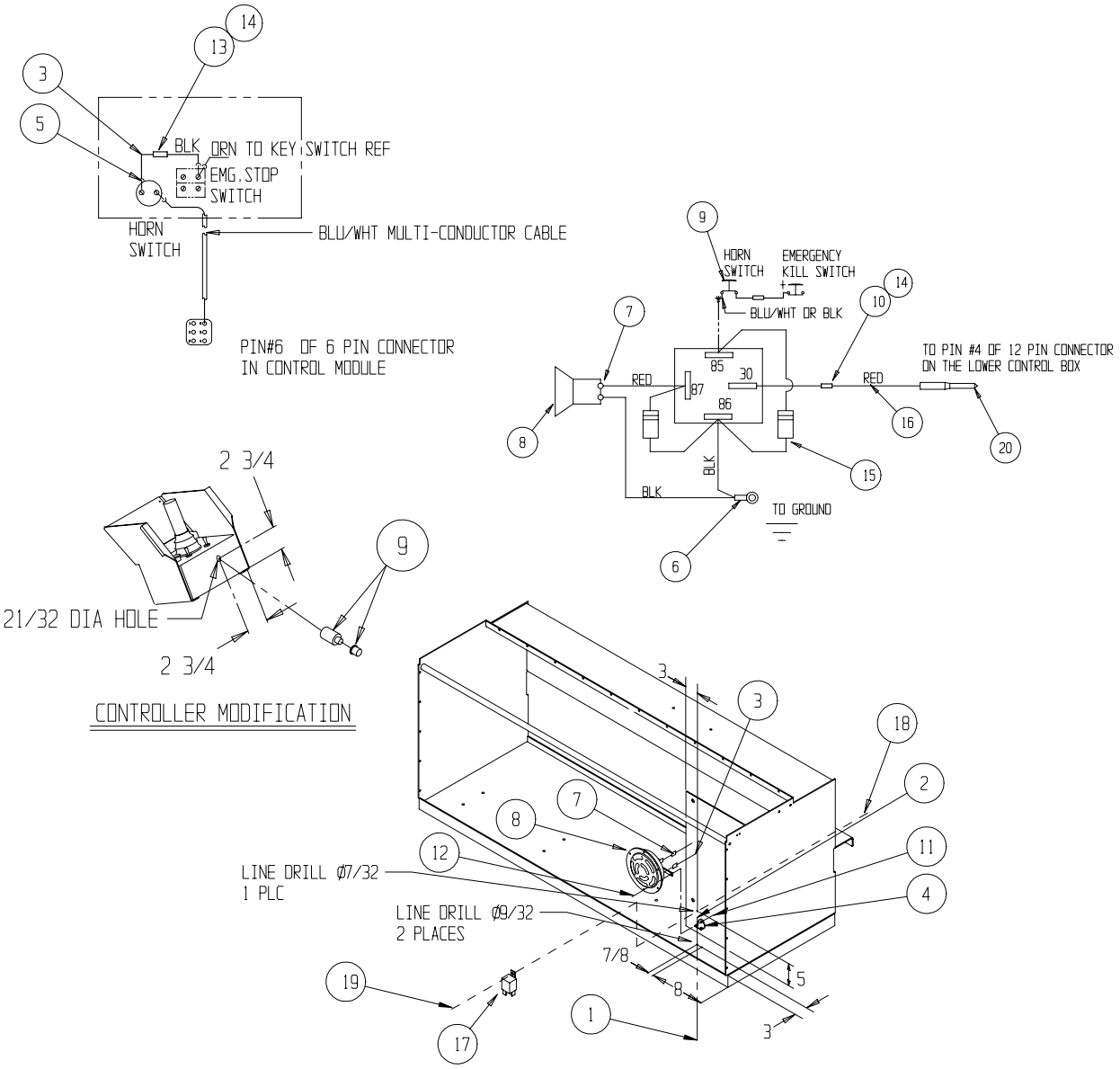

AC GENERATOR OPTION, DUAL FUEL

067848-000

ITEM	PART NO.	DESCRIPTION	QTY.
1	-	MODULE TRAY WELDMENT	REF
2	-	FUEL TANK	REF
3	-	ENGINE	REF
4	027979-000	GENERATOR	1
5	064212-000	CORD ASSY	1
6	063949-045	SHEAVE, WOODS AK46 WITH 5/8 BORE	1
7	011675-070	V-BELT 4L370	1
8	067528-000	CONTROLLER	REF
9	012797-000	SWITCH, TOGGLE	1
10	08271-000	SWITCH GUARD	1
11	064211-000	DECAL, ON-OFF	1
12	011254-010	BOLT 3/8-16 X 1 1/4	10
13	011248-006	ESNT 3/8-16	10
14	064793-000	RADIATOR BRACKET	1
15	065916-000	MOUNTING PLATE, GENERATOR	1
16	029610-004	CONN FORK 16-14 #10	3
17	029825-002	DIODE, 3 AMP	1
18	029620-002	CONN, BUTT 16 GA	1
19	029483-099	WIRE 16 GA RED/WHT	1 FT
20	063956-002	PIN, MALE CONTACT	1
21	029454-099	WIRE, 16 GA	1 FT
22	067907-	POWER TO PLATFORM OPT. (NOT SHOWN)	REF.
23	063969-001	PULLEY, IDLER	1
24	063969-002	PULLEY MOUNT, ECCENTRIC	1
25	011266-008	SCREW HHC 1/2-20 UNF X 1	1
26	064792-000	IDLER BRACKET	1
27	064791-000	SHEAVE	1
28	063961-030	SCREW HHC M8-1.25 X 30	3
29	011238-005	WASHER 5/16 SPLIT LOCK	3
30	011240-006	WASHER 3/8 FLAT	10

NOTES:

1. INSTALL ITEMS AS SHOWN AND CHECK ALIGNMENT OF ITEMS 6 AND 23 BEFORE INSTALLING ITEM 7. ITEM 6 SHOULD BE PARALLEL AND INLINE USING A STRAIGHT EDGE.
2. APPLY TENSION TO ITEM 7 BY MOVING ITEM 24. SECURE WITH ITEM 25. BELT SHOULD DEFLECT 5/32" WITH 3-5 LBS FORCE.
3. SET HIGH ENGINE SPEED TO 3450 +0/-50 RPM.
4. CUT NOTCH IN LOWER EDGE OF FAN SHROUD AS SHOWN IN DETAIL.

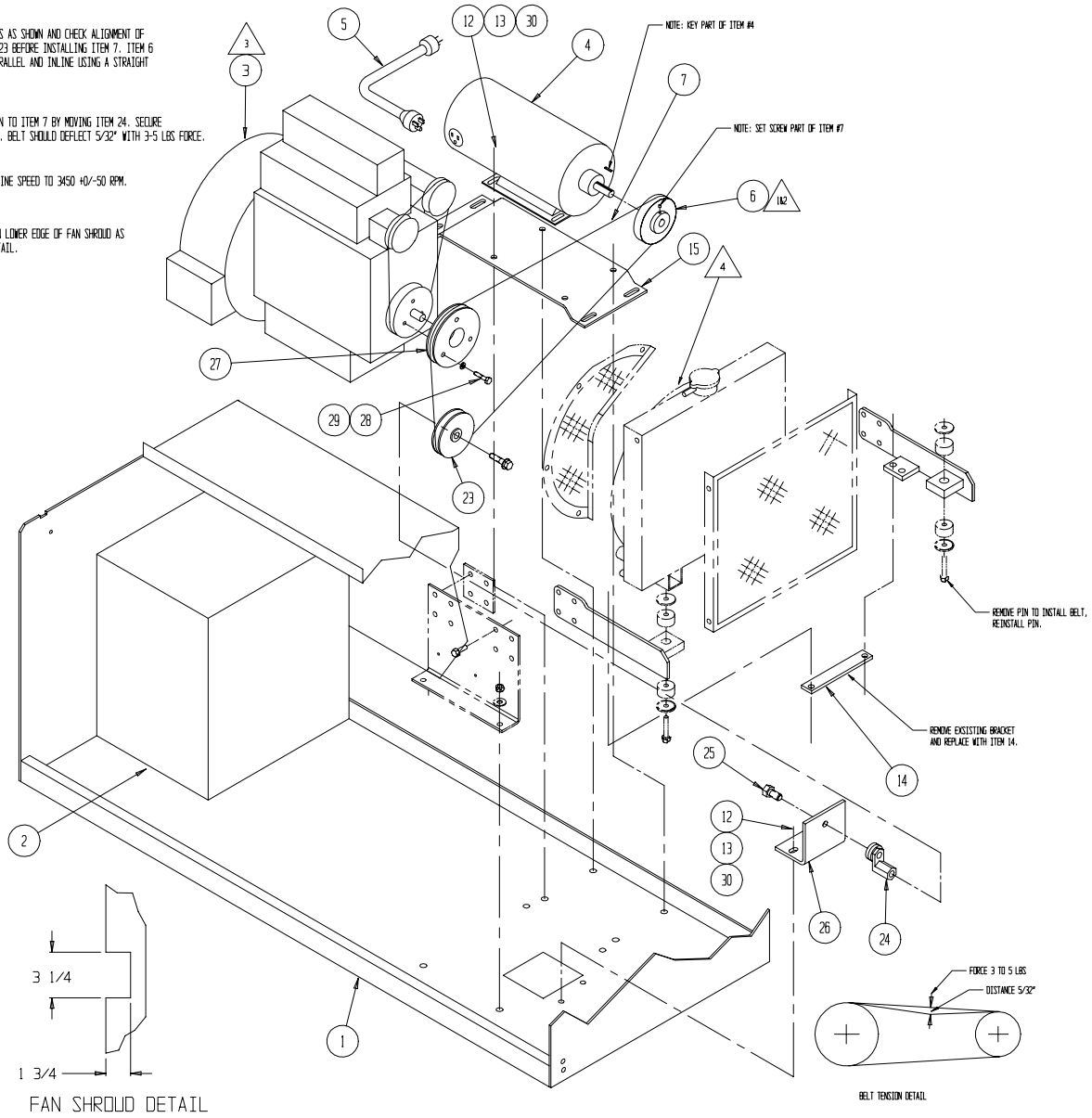

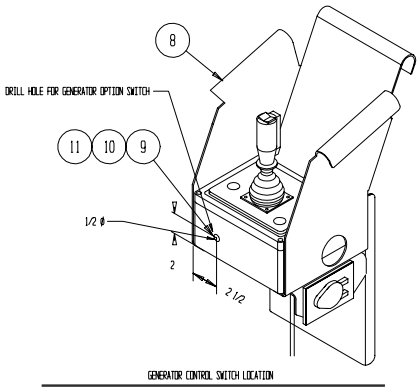

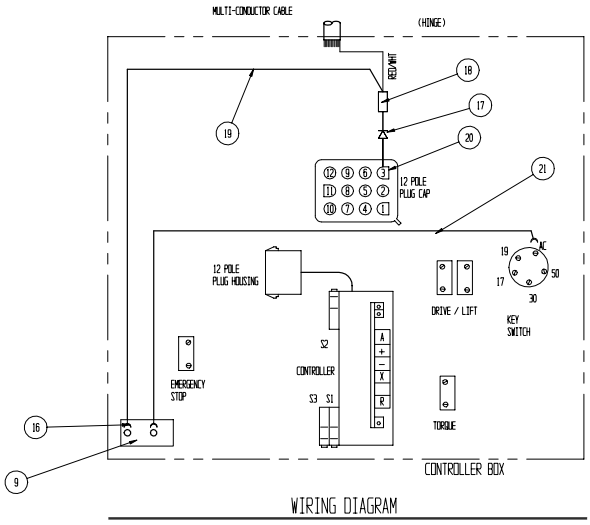

AC GENERATOR OPTION
DIESEL
067849-000

ITEM	PART NO.	DESCRIPTION	QTY.
1	-	MODULE TRAY WELDMENT	REF
2	-	FUEL TANK	REF
3	067614-000	ENGINE	REF
4	027979-000	WINCO GENERATOR	1
5	064212-000	CORD ASSY	1
6	063949-042	SHEAVE, GENERATOR- WOODS AC 40- 5/8 BORE	1
7	011994-011	V-BELT 3L-360	1
8	067528-001	CONTROLLER	REF
9	012797-000	SWITCH, TOGGLE	1
10	08271-000	SWITCH GUARD	1
11	064211-000	DECAL, ON-OFF	1
12	011254-010	BOLT 3/8-16 X 1 1/4	10
13	011248-006	ESNT 3/8-16	10
14	067614-021	DUAL SHEAVE - KUBOTA #17213-74281	1
15	065916-000	MOUNTING PLATE, GENERATOR	1
16	029610-004	CONN FORK 16-14 #10	3
17	029825-002	DIODE, 3 AMP	1
18	029620-002	CONN, BUTT 16 GA	1
19	029483-099	WIRE 16 GA, RED WHT	1 FT
20	063956-002	PIN, MALE CONTACT	1
21	029454-099	WIRE, 16 GA RED	1 FT
22	067907-	POWER TO PLATFORM OPT. (NOT SHOWN)	REF
23	063969-001	PULLEY, IDLER	1
24	063969-002	PULLEY MOUNT, ECCENTRIC	1
25	064792-000	IDLER BRACKET	1
26	011266-008	SCREW HHC 1/2-20 UNF X 1	1
27	011240-006	WASHER 3/8 FLAT	10

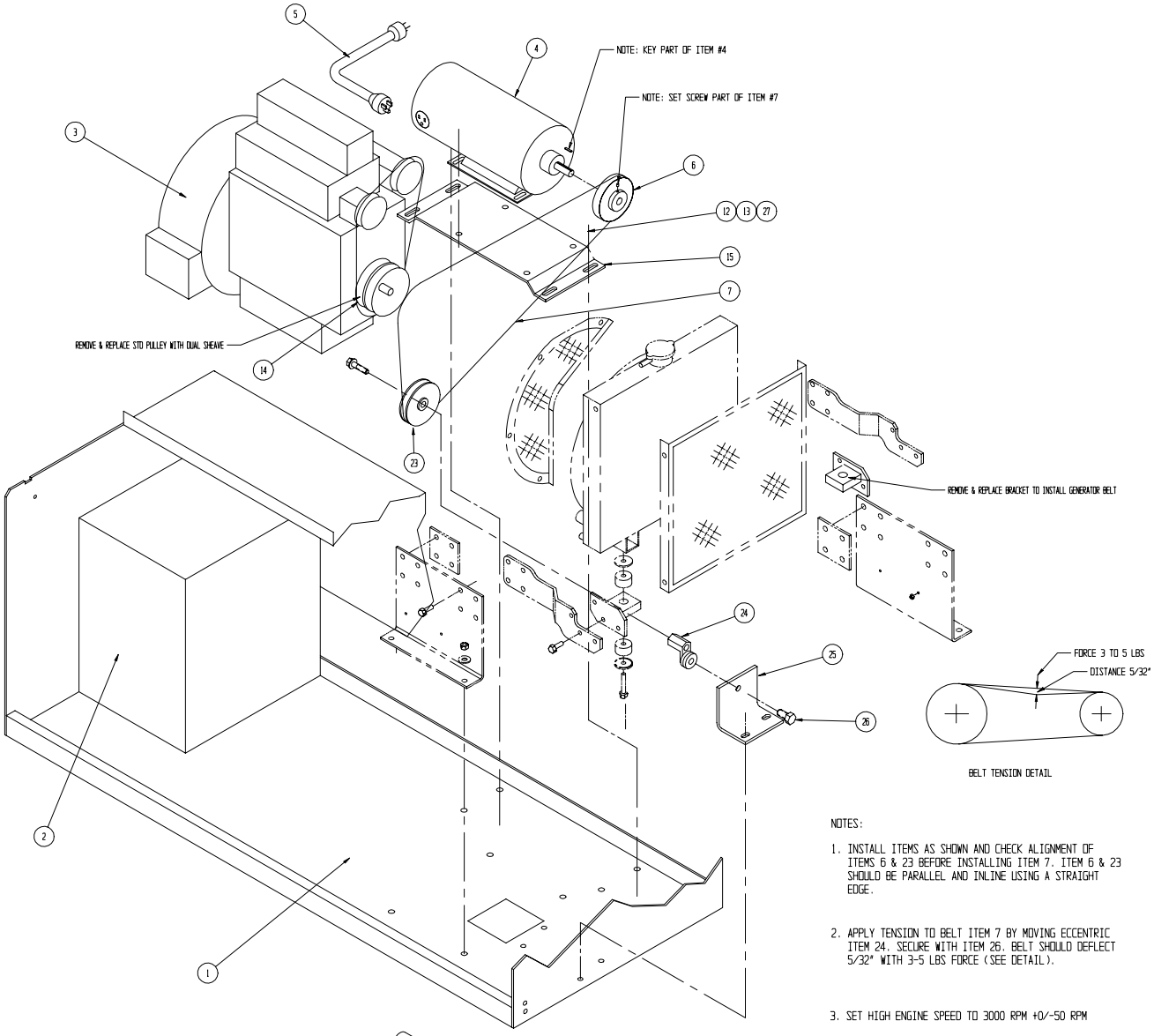

NOTES:

1. INSTALL ITEMS AS SHOWN AND CHECK ALIGNMENT OF ITEMS 6 & 23 BEFORE INSTALLING ITEM 7. ITEM 6 & 23 SHOULD BE PARALLEL AND INLINE USING A STRAIGHT EDGE.

2. APPLY TENSION TO BELT ITEM 7 BY MOVING ECCENTRIC ITEM 24. SECURE WITH ITEM 26. BELT SHOULD DEFLECT 5/32" WITH 3-5 LBS FORCE (SEE DETAIL).

3. SET HIGH ENGINE SPEED TO 3000 RPM +0/-50 RPM

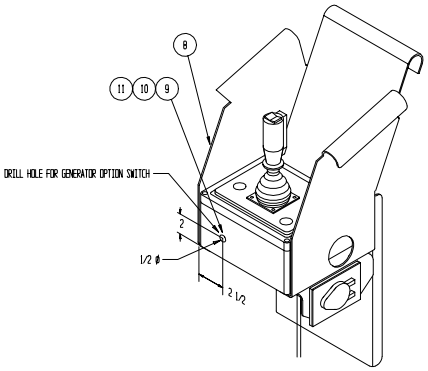

GENERATOR CONTROL SWITCH LOCATION

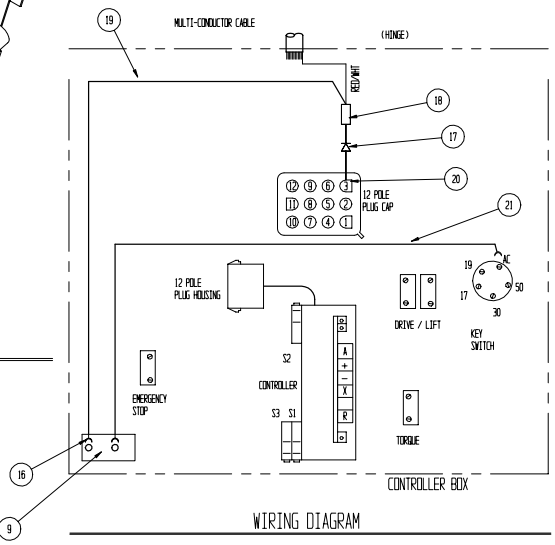

WIRING DIAGRAM

REMOVABLE CONTROLLER OPTION
LX50
061898-002

ITEM	PART NO.	DESCRIPTION	QTY.
1	028800-003	PLUG CONNECTOR (FEMALE)	1
2	028800-004	PIN CONTACT (MALE)	15
3	028800-015	PLUG SEALING	16
4	028800-016	RECEPTACLE CONNECTOR W/ CLAMP (MALE)	1
5	028800-005	SOCKET CONTACT (FEMALE)	15
8	030719-001	110 VAC BRACKET	1
10	011254-020	SCREW HHC GRD5 3/8-16UNC X 2 1/2	2
11	011240-006	WASHER 3/8 STD FLAT	4
12	011248-006	NUT HEX ESNA 3/8-16	2
13	068761-000	LOCKING WEDGE-CONN	1
14	068760-001	CONNECTOR-RECEPTACLE	1

ITEM	PART NO.	DESCRIPTION	QTY.
15	068762-000	PIN-CONTACT	9
16	068761-001	LOCKING WEDGE -CONN	1
17	068760-000	PLUG - CONNECTOR	1
18	068762-001	SOCKET-CONTACT	9
19	068764-000	PLUG-CONNECTOR	6
20	068908-000	BOOT ELECT. PLUG	1
21	068908-001	BOOT ELECT. RECEPTACLE	1

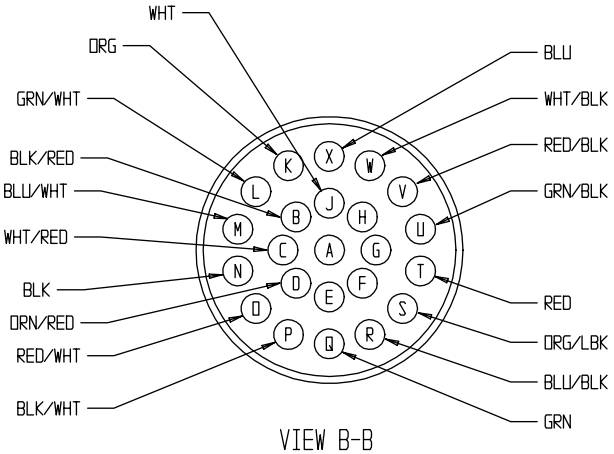

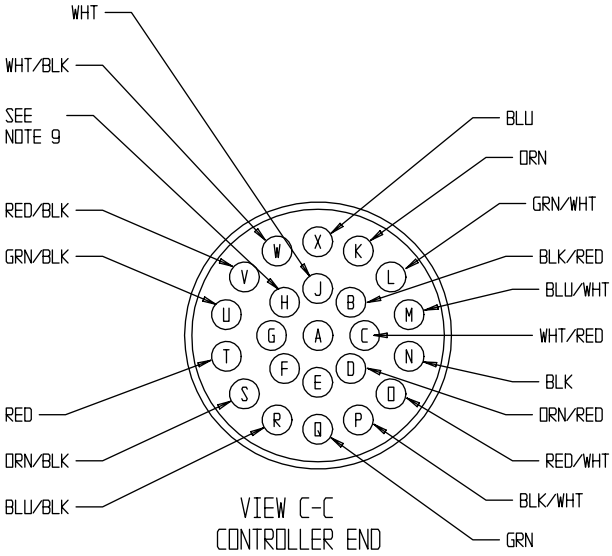

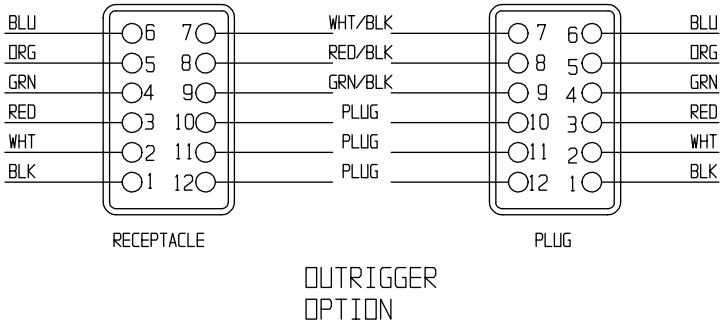

1. CUT OFF CONTROL CABLE 14 INCHES BELOW STRAIN RELIEF ON CONTROLLER.
2. CUT OUTER CABEL COVER OF LINKAGE CABEL BACK APPROXIMATELY 1-1/2 INCH AND STRIP APPROXIMATELY 1/4 INCH OF EACH END.
3. CRIMP SOCKETS (28800-005) ONTO WIRE ENDS AND INSERT INTO CONNECTOR (28800-016). REF. VIEW B-B.
4. CUT OUTER CABEL COVER OF CONTROLLER END BACK APPROXIMATELY 1-1/2 INCH AND STRIP APPROXIMATELY 1/4 INCH OF EACH END.
5. SLIDE BOOT AND CLAMP ONTO CABLE.
6. CRIMP PINS (28800-004) ONTO WIRE ENDS AND INSERT INTO CONNECTOR (28800-003). REF. VIEW C-C.
7. CLAMP BOOT TO CONNECTOR.
8. CONNECT CONTROLLER AND TEST MACHINE FOR PROPER FUNCTION.
9. USE TERMINAL " H " FOR HORN OPTION OR IF AUX WIRE IS REQUIRED.
10. ITEM #8 THRU 12 REQD ONLY FOR 110 VAC.
11. ITEM # 13 THRU 21 REQD ONLY OUTRIGGER OPTION.

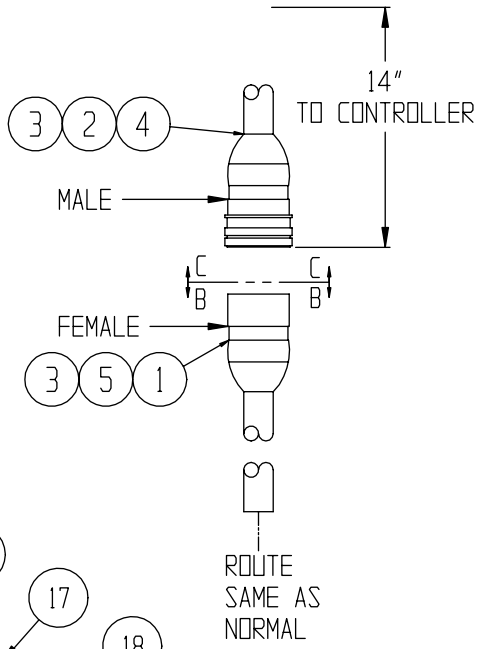

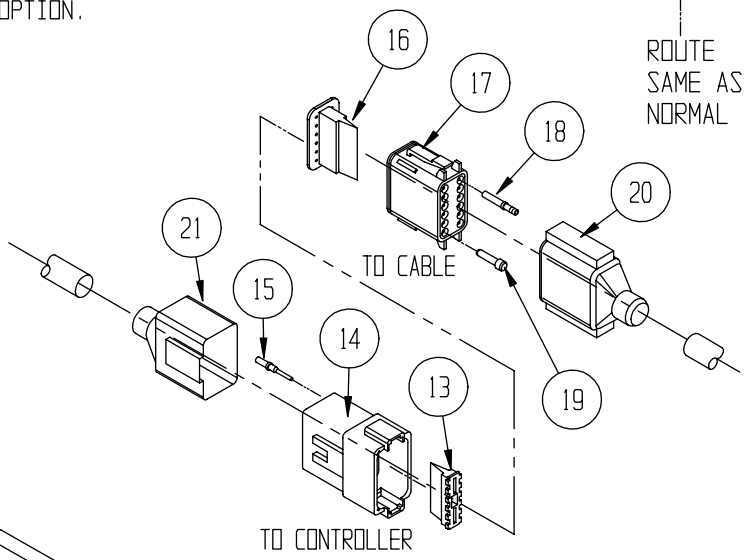

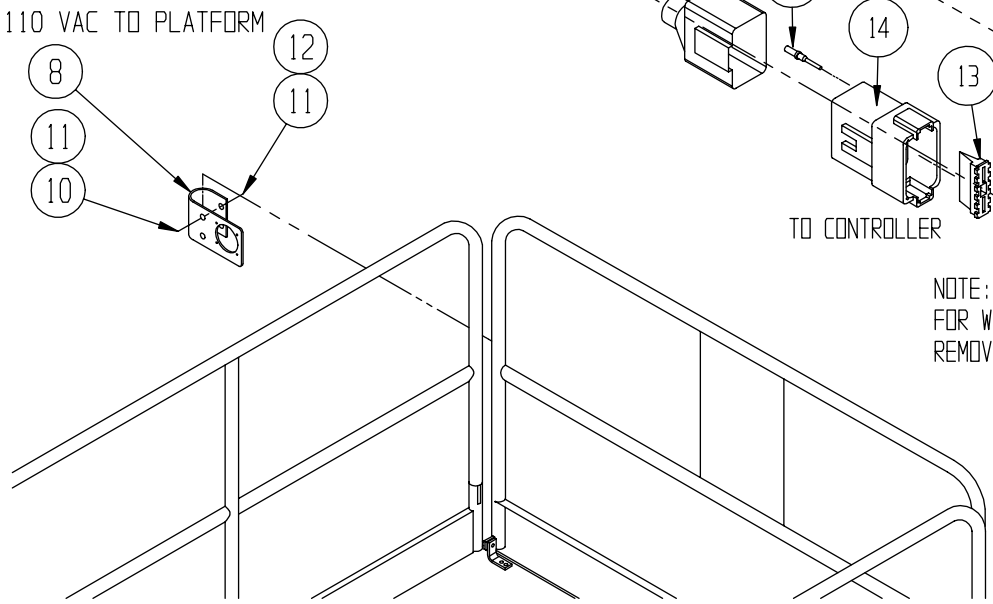

NOTE: USE DEUTSCH #HDT-48-00 HAND CRIMPER FOR WIRE TO PIN/SOCKET. USE #DT-RT1 TOOL TO REMOVE WEDGES IN PLUG & RECEPTACLE.

NOTES:

UpRight

Call Toll Free in U.S.A.

1-800-926-LIFT

Upright, Inc.
1775 Park Street
Selma, California 93662
TEL: 559/891-5200
FAX: 559/891-9012
PARTS: 1-888-UR-PARTS
PARTSFAX: 559/896-9244

UpRight Ireland, Ltd.
Pottery Road
Dun Laoire,
Ireland
TEL: +353-1-202-4100
FAX: +353-1-202-4105

P/N 067904-007
3/00 K